- *Meetings may be viewed on the City of Anacortes website, on the City of Anacortes YouTube Channel, or on TV Channel 10.*
- *To watch, listen to, or participate in the meeting live, visit https://us02web.zoom.us/j/84685300609 or telephone 1-253-215-8782 and enter Meeting ID 846 8530 0609.*
- *The public is encouraged to comment via email to pced@cityofanacortes.org, via written comment addressed to PCED, P.O. Box 547, Anacortes, WA 98221. Public comments received prior to 3:00 p.m. the day of the meeting will become part of the record for the meeting, just as if presented in person.*
- *Complete guidelines for virtual participation in Anacortes Planning Commission meetings are available here (page 2). View the quick video example for connecting to the meeting here.*

# Anacortes Planning Commission

**Municipal Building - Council Chambers**
**904 6th Street**

## May 28, 2025
## 6:00 PM

**PRELIMINARY AGENDA**
**Packet Materials / Watch Meeting**

1. **Roll Call**
2. **Pledge of Allegiance**
3. **Minutes**
   a. Minutes of 12/11/2024 were submitted for approval.
4. **Public Comment**
5. **Public Hearings**
   a. Shoreline Substantial Development Permit Application: SDP-2025-0001 - Curtis Wharf Shore Power & Pump Out (Public Hearing & Recommendation)
   b. 2025 Comprehensive Plan Update - Proposed amendments to the goals and policies of the Economic Development and Parks, Recreation & Open Space elements (Public Hearing)
6. **Other Business**
7. **Planning Department Update**
8. **Adjournment**

**Citizens wishing to comment on items not on the agenda may do so under Public Comment. Citizens wishing to comment during a public hearing may do so as those items are considered by the Planning Commission during the course of the meeting.*

*The City of Anacortes is committed to making public meetings available and accessible to all members of the community. For assistance with special needs, please contact the City Clerk at 360-299-1960 in advance of the meeting.*

# Anacortes Planning Commission Minutes - December 11, 2024

**Roll Call**

Chairperson Linda Martin called to order the Anacortes Planning Commission meeting of December 11, 2024 at 6:00 p.m. Commissioners Jim Stoneman, William McCombs, Frank Jeretzky, Paul Ryan, Luke Currier, and Mike Mills were present.

**Pledge of Allegiance**

**Minutes**

**Minutes of 09/11/2024, 09/25/2024 and 10/02/2024 were submitted for approval.**

Frank Jeretzky moved to approve the September 11, 2024 minutes as submitted. Jim Stoneman seconded. All ayes.

Jim Stoneman moved to approve the September 25, 2024 minutes as submitted. Luke Currier seconded. Mike Mills pointed out a correction, that the GMA course is taught at the Amhurst Senior College, not the senior center. The change was approved by Commissioners Stoneman and Currier. Will McCombs abstained, all other Commissioners Ayes.

Mike Mills moved to approve the October 2, 2024 minutes as submitted. Will McCombs seconded. All ayes.

**Public Comment**

No public comment taken.

**Public Hearings**

**Open Record Pre-Decision Public Hearing CUP-2024-0001 Dog Grooming Salon**

Anna Dewey said this is a Conditional Use Permit (CUP) for a dog grooming salon. The proposal is in the CBD which requires the CUP for the proposed use of animal care. The applicant is proposing 3-4 dogs onsite at a time and 1-2 staff. She reviewed the proposed floor plan changes and improvements. There are no proposed structural changes or external work to the building. They are proposing some planter boxes at the front entry to improve the streetscape. No public comment was received for this project. This is a type 4 review which requires a City Council decision. This is consistent with the criteria in the code for CUP's. The parking and loading for that area is already adequate. Staff recommends approval with conditions: operation is permitted as long as the business continues to operate under animal care; the applicant will need to get a City of Anacortes business license and obtain a sign permit.

Frank Jeretzky asked if the bathroom is shared with the adjacent business.

Stephanie Monteverde, applicant, clarified that the bathroom is shared with the pottery business via a shared hallway.

Linda Martin asked how the virtual public meeting went.

Anna Dewey stated that mailers were sent out, but there was no public in attendance online.

Grace Pollard clarified the City has had many meetings virtually, such as the MJB project, the Port of Anacortes, etc. We've had a variety of success in attendance.

Public hearing opened
No comment received
Public hearing closed

Jim Stoneman moved to recommend approval of CUP-2024-0001 subject to the conditions of approval 1-3 as listed in the staff report. Paul Ryan seconded. All ayes.

**Proposed amendments to Anacortes Municipal Code (AMC) Title 19 to comply with new state requirements and improve predictability and timeliness in project permit review (Draft Ord. 4092)**

Libby Grage said tonight's hearing is to discuss amendments to the AMC to comply with new legislation, SB5290, regarding consolidating, streamlining and improving local permit review processes for residential permits. This amends RCW Chapter 36.70B. She reviewed the key requirements: (1) revise the current 120-day time period for project review; (2) refund 10-20% of permit fees if time periods are not met, unless at least 3 listed optional measures are adopted; and (3) modify existing annual performance report requirements.

Ms. Grage pointed out that currently most of our permit review timelines are 120 days, but this will be changing to 65-170 days dependent on the type of permit. This will be effective January 1st regardless if we adopt them or not. The proposed permit review timelines are: (1) no public notice requirement - 65 days; (2) public notice, but no hearing - 100 days; and (3) public notice and hearing - 170 days. To comply with SB5290, staff proposes to delete our current timing table and add to AMC 19.20.030 the new review time periods. She moved on to the refund requirements in SB5290 and the three proposed exemption measures for adoption: (1) budget and continue to budget for on-call permitting assistance when permit volumes or staffing levels change rapidly; (2) adopt development regulations that make housing types an outright permitted use in all zones where the housing type is permitted; and (3) adopt a procedure to offer a meeting with the applicant to attempt to resolve outstanding issues during the review process. Regarding the development regulations, in table 19.41.050 under single family, the proposal is to remove the conditional use option for the CBD, C, and LM zones to prohibited. The purpose of these zones is commercial oriented, so low-density single family is out of character for those zones. For multi-family, the proposal is to change CM, LM and MS from conditional to permitted. She pointed out that the Shoreline Master Program addresses uses in the CM area, so staff did not see a concern at updating this. Lastly, there were proposed changes to adult family homes, to make them permitted in more zones, to be in line with state law.

Ms. Grage reviewed the third measure. After the second request for corrections, the new proposal requires the City to offer a meeting to resolve the issues. If they cannot be resolved, after receiving the applicants response, staff will forward the application to the next step in the review process. She moved on to the performance reports. Starting January 1st, the Department needs to track compliance with review time periods. Our permit software will help with that. Starting January 1, 2026, staff will report compliance to City Council. Other notable changes: (1) allow the Director to waive pre-application neighborhood meeting requirements; (2) provide authority to expire permit applications; the applicant has 90 days to respond to requests for additional information. If there's no response, the Director may expire the application; and one or more 90-day extensions (not to exceed 3); and (3) changes necessary to comply with state law on adult family homes. We don't currently have a provision to expire applications that have been going through the review process for a lengthy period.

Libby Grage clarified that the City Council planning committee drafted these proposed changes. PCED staff sent the proposed amendments to Commerce for review and we did not receive comments. The PCED Director issued a SEPA DNS on November 13, 2024. This was appealed, but that does not affect the Planning Commission's ability to make a recommendation. AMC 19.16 provides the process for Planning Commission review and consideration of legislative actions.

Frank Jeretzky asked if applications currently have an expiration.

Libby Grage stated this applies to applications that are not yet approved and going through multiple reviews. If a permit application is deemed complete, it would be vested to the development regulations at the time the application was deemed complete.

Frank Jeretzky wondered if there is a disagreement on the interpretation of a code, would those go before the Hearings Examiner for a decision.

Ms. Grage clarified it depends on the type of permit and the decision maker. This isn't really anything new for us. We work with applicants when there are issues raised.

Will McCombs referenced the permitted use matrix. He asked if there are any conditional uses that exist in the residential zones.

Libby Grage said there are no conditional uses in the residential zones.

Will McCombs asked if there is a way for the neighborhood to provide comment if the proposal is in these

zones.
Libby Grage clarified that it depends on the extent of the project. If certain thresholds are exceeded, it can trigger public notice and hearing requirements, especially if it triggers SEPA review. For example, in the CM zone, proposals would also have to comply with shoreline jurisdiction.
Commissioner McCombs asked if the new requirements are more lenient.
Ms. Grage agreed that they are for projects that require a notice of application and public hearing.
Will McCombs wondered why those types of projects would be given more review time.
Libby Grage said that for a project that requires additional review and/or a public hearing, we increased the timeline to be more realistic. This provides applicants predictability for the review timeline. These projects (type 3 and 4) take longer and are in line with the state recommendations.
Linda Martin pointed out that the ordinance talks about the 120-day review period. She expressed concern about the 170-days.
Libby Grage stated this is a more realistic timeframe and can help applicants plan better for their projects.
Linda Martin said we are clearly getting rid of conditional uses. She expressed mixed feelings about this. This is a good idea because it gives more flexibility for owners, but the negative is the impact on the community and the lack of notice and hearings.
Will McCombs expressed the same concern. He feels that people are losing their voice.
Ms. Grage stated that if commissioners have concerns about the impacts a specific type of use may have on an area, she suggests those are brought up now so that they can be addressed in the development regulations. This clarifies what can be permitted. It's actually more transparent.
Commissioner Martin said the cottage housing development regulations need to be addressed as they impact the surrounding neighborhoods.
Libby Grage clarified there are many levels of review that impact what is allowed to be developed. Those reviews are intended to address concerns that would have been brought up in the CUP process.
Mike Mills expressed concern about "permitted by right". He suggested that the Director document why the decision was made. Since the City Council planning committee drafted this, he wonders what the Planning Commission's role is. Basically, the recommendation came from Council and we are turning it back to them.
Libby Grage clarified that the planning committee is just a subgroup of Council, so not all the group has looked at this. This is the first public hearing on this proposal and the Planning Commission will make a recommendations to City Council. This comes before the Planning Commission because it is a development regulation which is part of your review.
Will McCombs wondered if this process is typical for other cities. This seems like the tail wagging the dog.
Ms. Grage pointed out that this was not a recommendation from the entire Council. She is not sure how other cities handle this.
Commissioner Mills said the planning committee's role is to make recommendation to Council. It seems strange to include Planning Commission.
Libby Grage reminded the commissioners that this is part of the process.
Luke Currier referenced the discount on application fees. He asked Libby to explain how the first item, which is to have someone on call for review, would work.
Libby Grage said there will be a budget item for "when needed" to hire an on-call person. We still need to figure out who that consultant will be.
Luke Currier asked if the on-call person could be used now and maintain the current timelines.
Ms. Grage said that would depend on the budget.

Public hearing opened
Steve Cheney gave the example of 902 8th St, which is a single-family home built in 1890. It has been a residence and had commercial uses historically. Our intent is to have a home downstairs and ADU above. Since this is in the CBD, a SFR would not be a permitted use in that area. That makes it impossible to use the home as a home. If we cannot use it as a home, our only other option is to tear it down and rebuild.

Public hearing closed

Mike Mills moved to recommend to the City Council the adoption of the amendments as recommended by the City Council planning committee presented in tonight's packet. Will McCombs seconded. All ayes.

**Other Business**

**Planning Department Update**

Libby Grage welcomed Anna Dewey as our new Associate Planner. She said there are no other updates. She reminded the Commissioners that there are no more meetings this year.

**Adjournment**

Linda Martin adjourned the meeting at 7:26 p.m.

# Planning Commission Agenda Bill

**Meeting Date:** May 28, 2025 **Agenda Item:** 5.a.

**Subject:** Shoreline Substantial Development Permit Application: SDP-2025-0001 - Curtis Wharf Shore Power & Pump Out (Public Hearing & Recommendation)

**Staff Contact:** Anna Dewey, Grace Pollard

| Approved for Submittal to Commission by | Action Type |
|---|---|
| Libby Grage | Public Hearing |
| John Coleman | |

**Summary Statement:** The Port of Anacortes is seeking approval of a Shoreline Substantial Development Permit to install a mobile shore power system and commercial blackwater pump out system at Curtis Wharf. This project will not change or expand the current uses of Curtis Wharf. Connection to a shore power system while at berth will allow vessels to reduce their greenhouse gas (GHG) emissions, diesel particulate matter, and noise impacts to near-port communities. A commercial pump out facility permits vessels to discharge directly to the sanitary sewer system instead of either discharging black water at sea or a diesel-powered marine vacuum service to empty their blackwater tanks.

**Background:** None

**Previous Action:** None

**Competing Viewpoints Considered:** To be heard during the open-record public hearing.

**Recommended Motion:** I move to adopt the Findings of Fact, Conclusions of Law, and Recommendations as presented in the staff report dated May 22, 2025, and recommend to City Council APPROVAL WITH CONDITIONS of Shoreline Substantial Development Permit SDP-2025-0001.

**Alternative Actions:** Move to amend, add, or remove any Findings of Fact, Conclusions of Law, or Recommendations.

**Attachments (listed in order presented):**

1. Staff Report_SDP-2025-0001
2. Exhibits A - L Combined
3. Planning Commission Recommendation SDP-2025-0001_DRAFT

**Anacortes Planning, Community & Economic Development Department**
904 6TH Street / P.O. Box 547, Anacortes, WA 98221
360.299-1984 - Office Hours: Mon-Fri 8:00 AM – 5:00 PM

# SHORELINE SUBSTANTIAL DEVELOPMENT PERMIT: STAFF REPORT

| | | | |
|---|---|---|---|
| **File Number** | SDP-2025-0001 | **Date of Report** | May 22, 2025 |
| **Project Title** | Curtis Wharf Upgrades | **Related File(s)** | PRE-2024-0018 |
| **Project Location** | Curtis Wharf – 1108 2nd Street (P31510) | | |
| **Request** | The Port of Anacortes has requested a shoreline substantial development permit for the installation of a mobile shore power system and commercial blackwater pump out system at Curtis Wharf. Connection to a shore power system while at berth will allow vessels to reduce their greenhouse gas (GHG) emissions, diesel particulate matter, and noise impacts to near-port communities. A commercial pump out facility permits vessels to discharge directly to the sanitary sewer system instead of either discharging black water at sea or using a diesel-powered marine vacuum service to empty their blackwater tanks. This project will not change or expand the current use of Curtis Wharf, and there are no structural modifications associated with this work. All work will be done within existing disturbed/developed areas. | | |
| **Landowner/Applicant** | Port of Anacortes<br>317 Commercial Avenue<br>Anacortes, WA 98821 | | |

## SITE INFORMATION

| | | | |
|---|---|---|---|
| **Zoning** | Manufacturing and Shipping (MS) | **Comprehensive Plan Designation** | Manufacturing / Shipping (MS) |
| **Present Use of Property** | Port facility, including a commercial marine pier. | | |
| **Critical Areas** | Pursuant to Chapter 6 and Appendix "A" of the Shoreline Master Program (SMP) regulating critical areas, the subject development was reviewed for proximity to critical areas.<br><br>**SMP A-1: Frequently Flooded Areas**<br>Based on FEMA's National Flood Hazard Mapping, the subject property is located within FIRM panel 5303170040A. The proposed work requires that a Flood Development Permit be obtained prior to the beginning of construction.<br><br>**SMP A-3: Geologically Hazardous Areas**<br>Based on the City mapping system, the subject property is in an identified area of tsunami hazard and seismic hazard area; however, the proposed shore power | | |

| | |
|---|---|
| | pedestals and commercial pump out facility do not have a risk of hazard. Therefore, the provisions of this section would not apply.<br><br>**SMP A-5: Fish and Wildlife Conservation Areas**<br>Based on the City mapping system, the subject property is adjacent to an identified Critical Areas Habitat Group for smelt spawning and Dungeness Crab; however, the proposed shore power pedestals and commercial pump out facility will not exceed the existing developed footprint of the site, no encroachment into critical areas are proposed or permitted. It is determined that no net loss of critical habitat area or shoreline ecological function will occur. |

## PROJECT LOCATION & SURROUNDING USES

| | Zoning / Comprehensive Plan | Property Use |
|---|---|---|
| **North** | Manufacturing & Shipping (MS) | Guemes Channel |
| **South** | Manufacturing & Shipping (MS) | Port owned – industrial maritime facility |
| **West** | Light Manufacturing (LM) | Port owned – industrial maritime facility |
| **East** | Manufacturing & Shipping (MS) | Port owned – industrial maritime facility |

## PROCEDURAL

1. **Type of Review.** According to AMC Table 19.20.030-1 and 18.16.100(B), shoreline substantial development permit applications for projects valued $1 million or more are considered a Type 4 review. For Type 4 reviews, the Planning Commission holds the open record public hearing, and the City Council renders the final decision regarding the proposed shoreline substantial development permit.
2. **Project History.**
   - A mandatory preapplication meeting was held on July 23, 2024, and the mandatory preapplication neighborhood meeting was held on April 24, 2025.
   - The project site is adjacent to a known cleanup site, Quiet Cove, but will not impact the cleanup site. The Port of Anacortes has an Agreed Order with the Department of Ecology for remediation of the site (No. DE11346).
   - The Port of Anacortes has a Right of Way Use Agreement with the City regarding use of 2nd Street (AFN 202206240050).
3. **Environmental Review.** The Port of Anacortes, as lead agency, determined the scope of work will not have a probable significant adverse impact on the environment; a determination of non-significance (DNS) does not require an environmental impact statement (EIS) under RCW 43.21C.030(2)(c). This determination was issued on November 6, 2024, and is on file with the Department of Ecology (SEPA #202404836). (Exhibit E)
4. **Public notice and reviewing departments/agencies.** A notice of application with a 30-day public comment period was published in the Anacortes American, posted on the project site and mailed to property owners within 300 ft. (Exhibit L)

| | |
|---|---|
| **Application Submitted** | February 4, 2025 |
| **Determination of Completeness** | April 1, 2025 |
| **Notice of Application & Public Hearing** | April 16, 2025 |
| **Open Record Public Hearing (Planning Commission)** | May 28, 2025 |
| **Close Record Decision Hearing (City Council)** | June 9, 2025 |

5. **Reviewing departments/agencies.** The project application was routed for review to applicable City departments and outside agencies.
6. **Consideration of written comments and applicant responses**. The notice of application public comment period ended May 16, 2025. In making its recommendation, the Department considered timely received written comments and the applicant's responses, if any, as required in AMC 19.20.130(C).

   6.1. Applicable comments received from city staff have been incorporated into this staff report. No comments were received from the public or outside agencies.

## DEPARTMENT REVIEW – FINDINGS OF FACT

1. The application was submitted by Kevin Anderson with the Port of Anacortes for the installation of a mobile shore power system and commercial blackwater pump out system at Curtis Wharf. This project does not propose to change or expand the current use of Curtis Wharf.

1.1. The installation of a vessel pump out facility ensures vessels comply with local no discharge zones, and the new shore power will allow vessels to reduce their use of diesel-powered generators while at berth.

2. The proposed vessel sewage collection design includes mounting a peristaltic pump to the northeast corner of Curtis Wharf with an adjacent bypass force main connection for vessels with internal sewage ejection pumps.

   2.1. Backflow preventors will be installed downstream of the pump and downstream of the bypass force main connection.

   2.2. The force main will be suspended below the wharf by utility brackets, transitioning to buried piping where the wharf meets land.

   2.3. The force main length is short enough that the peristaltic pump's design capacity is capable of conveying vessel sewage directly to the existing City sanitary sewer manhole at "O" Avenue/ Railroad Avenue.

   2.4. The maximum discharge rate of the pump out facility will be limited to approximately 50 gallons per minute (gpm). Anticipated maximum usage is one vessel daily with a typical blackwater tank volume of approximately 1,000 gallons.

   2.5. A flowmeter will be installed for billing purposes and a sampling hatch for City staff to verify the strength of waste being discharged to the Anacortes Wastewater Treatment Plant. The Port will enter into a discharge agreement with the City of Anacortes and purchase capacity prior to the pump out operation.

3. The proposed mobile shore power system will be installed at two berth positions at Curtis Wharf to improve electric service for multiple types of vessels. It will allow vessels to connect to the shore-based electrical grid rather than reliance on their diesel generators.

   3.1. There is sufficient electrical service at the site for this level of shore power, and this system will consider the maximum utilization of the existing electrical system and capacity.

   3.2. The shore power pedestals will be mounted on a skid and easily moved by forklift.

   3.3. The conduit run will be undermounted or routed along the bullrails using appropriate armored conduit for marine use.

   3.4. The Port will track greenhouse gas (GHG) offsets from the operations of the shore power at Curtis Wharf and report these to the Department of Ecology and Washington State Department of Transportation.

4. The new pump out facility may reduce blackwater discharge into the Salish Sea, and the new shore power connection can reduce greenhouse gas (GHG) emissions, diesel emissions, in-water and near port noise by letting vessels cold-iron while they are at berth.
5. The proposed improvements will not alter the shoreline within the wharf, and the use of the wharf will remain the same. Improvements are designed to meet the needs of existing users and service levels at the wharf. The project is designed to serve current volumes of vessel traffic and will not result in any increase in the number of vessel trips or vessel usage.
6. All installation will be conducted using hand tools, either on top of the deck of Curtis Wharf or beneath from a work skiff, resulting in no potential for adverse environmental impacts.

7. The post-project operations at the wharf will be identical to the existing conditions, thus the proposed project will not result in any negative impacts to water quality.
8. The upland portion of the subject site is located within the Urban Maritime shoreline environment designation. The purpose of the Urban Maritime designation is to preserve a variety of water-dependent, water-oriented, and water-related public, commercial, and industrial uses such as those associated with the Port of Anacortes.
    8.1. According to Table 5.1 of the SMP, the proposed shore power pedestals and commercial pump out facility are considered an accessory use to the wharf, which is a "water-dependent industrial and port facilities" and is a permitted use in the Urban Maritime shoreline environmental designation.
    8.2. Due to the scope of work, the proposed development is not exempt from a Shoreline Substantial Development Permit.
    8.3. Development Regulation (DR) 5.11.3 No net loss of shoreline ecological function shall result from new development.
    8.4. Per Section 5.12(A)(9), except as otherwise stated, the comprehensive plan, zoning regulations, subdivision regulations, health regulations, and other adopted regulatory provisions apply within shoreline jurisdiction. In the event the provisions of this SMP conflict with provisions of other responsible local government regulations, the more protective of shoreline resources shall prevail.
9. The portion of the project site waterward of the OHWM is located within the Aquatic shoreline environment designation. The purpose of the Aquatic designation is to protect, restore and manage the unique characteristics and resources of marine waters, including habitat, ecology, navigation and public enjoyment.
    9.1. According to Table 5.1 of the SMP, the proposed shore power pedestals and commercial pump out facility are considered an accessory use to the wharf, which is a "water-dependent industrial and port facility" and is a permitted use in the Aquatic shoreline environment designation.
    9.2. Policy 5.6.9 Shoreline uses and modifications within the Aquatic environment should be designed and managed consistent with the Environmental Protection policies and regulations of Chapter 6 including, but not limited to, preservation of water quality, habitat, natural hydrographic conditions, and safe, unobstructed passage of fish and wildlife, particularly those species dependent on migration.
    9.3. Development Regulations (DR) 5.6.8 All feasible methods shall be employed to minimize over-water noise generation and pollution.
    9.4. Per Section 5.12(A)(10), where a use or modification may occur in the Aquatic environment as indicated in Table 5.1 and in the corresponding regulations for that use, it shall also be subject to any more restrictive permit processes or prohibitions on that use or modification as indicated for the adjacent shoreland environment.
10. SMP Chapter 6 provides policies and general regulations for environmental protection. Based on the application materials, *the proposed project is a continuation of the existing use of the site and will not result in a loss of ecological function or an adverse impact to critical areas.* Therefore, no compensatory mitigation measures are proposed with the installation of the shore power pedestals and commercial pump out facility.

10.1. As a result of the historic development and existing level of disturbance, the proposed project has negligible potential to impact critical saltwater habitat. The majority of these areas are not present within or adjacent to the project area.

10.1.1. Q'elech'ilhch Park, adjacent to Curtis Wharf, is listed as smelt spawning habitat. The proposed project will have no mechanism to impact either smelt or sand lance spawning due to the nature of the proposed work.

10.1.2. The project involves only superficial changes to the existing wharf and has no mechanism to affect migration corridors of juvenile salmonids. There will be no increase in overwater coverage, so there is no expected reduction to the quality of habitat within the wharf for juvenile salmonids.

10.2. TESC measures will be implemented during construction, and the site will have operations source control best management practices (BMPs) in place to prevent ongoing impacts.

10.3. The site is already highly modified from the natural state and the improvements will be entirely within the footprint of the existing pier. There is no existing vegetation on site.

10.4. The project's construction and operation will not affect shoreline processes as designed.

10.5. The project will not extend to or below the ordinary high-water mark (OHWM).

10.6. Construction noise associated with a variety of construction equipment will occur for the duration of the project. The construction noise would only occur during daylight hours as permitted by the City of Anacortes noise ordinances. The expected noise levels are not significantly different than those from the uses at Curtis Wharf.

11. SMP Chapter 8 provides specific policies and regulations for specific uses. The performance standards contained herein augment standards established through other land development regulations. Where conflict arises between these and other applicable controls, the regulations that provide more protection to the shoreline area shall apply.

**11.1. Industrial and Port Facilities**

11.1.1. Policy 8.6.1 Reserve shorelines that are particularly suitable for water-dependent and water-related industrial and port development for these uses.

11.1.2. Policy 8.6.4 Encourage cooperative use of docks, cargo handling, storage, parking, and other accessory facilities among private or public entities in shoreline industrial and port areas.

11.1.3. Policy 8.6.5 Ensure that land transportation and utility corridors serving ports and water-related industry follow the guidelines provided under the sections dealing with utilities and transportation.

11.1.4. Policy 8.6.6 Only water-dependent industrial and port uses shall be permitted on shorelands with direct frontage on and practical access to navigable waterways.

11.1.5. Policy 8.6.7 Opportunities for public access to the water are required at port and industrial sites, unless such access would interfere with operations or endanger public health and safety, or the proponent otherwise provides for equivalent access elsewhere in the City.

11.1.6. Development Regulations (DR) 8.6.7 Industrial and port facilities shall be located, designed, constructed, and operated so as to minimize impacts to shoreline resources and adjacent property owners, as well as adjacent shoreline or water uses.

11.1.7. Development Regulations (DR) 8.6.8 Port and industrial facilities shall provide public access to shoreline areas in accordance with Chapter 7, *Public Access*, taking into consideration constitutional and statutory limitations, public safety, health, and security.

11.1.7.1. Public access to the project site is neither appropriate nor desirable because of maritime and public safety concerns. However, adjacent public access points will be maintained.

12. SMP Chapter 9 provides specific shoreline modification policies and regulations for specific uses. The performance standards contained herein augment standards established through other land development regulations. Where conflict arises between these and other applicable controls, the regulations that provide more protection to the shoreline area shall apply.

**12.1. Fill**

12.1.1. Policy 9.7.1 Fill should be located, designed, and constructed to protect shoreline ecological processes and functions.

12.1.2. Policy 9.7.2 Fill landward of the ordinary high-water mark should be permitted when necessary to support permitted uses, and when significant impacts can be avoided or mitigated.

12.1.3. Development Regulation (DR) 9.7.1 Fill for water-dependent uses and for public use shall be given priority.

12.1.4. Development Regulation (DR) 9.7.2 Fill shall be permitted only when in conjunction with a proposal or activity otherwise permitted under the SMP.

12.1.5. Development Regulation (DR) 9.7.4 Projects shall be located and designed to minimize the area of fill necessary to accommodate the use.

12.1.5.1. Fill for this project is minimal and limited to where sewer pipes suspended under Curtis Wharf shift to buried pipes for connection to the sewer lateral. It is estimated that there will be fewer than 50 cubic yards of excavation.

12.1.6. Development Regulation (DR) 9.7.6 Fill shall be provided with some means for erosion control and/or shoreline stabilization consistent with the policies and regulations of Section 9.11, *Shoreline Stabilization Measures and Flood Protection Works*.

12.1.7. Development Regulation (DR) 9.7.9 Fills shall be located, designed, and constructed to protect shoreline ecological functions and ecosystem-wide processes.

# CONCLUSIONS OF LAW

1. Improvements that are considered accessory to a water-dependent use (Curtis Wharf) are permitted in the Urban Maritime and Aquatic shoreline designations per the Anacortes Shoreline Master Program.
2. The proposed wharf improvements will adhere to the use preference listing in RCW 90.58.020.
3. The shoreline permit was reviewed for conformance with all applicable Shoreline Master Program regulations, including but not limited to, the above list.
4. The subject proposal is consistent with the Washington State's Shoreline Management Act, City of Anacortes' 2010 Shoreline Master Program and development regulations listed therein for developments within the Urban Maritime shoreline environment designation.
5. Any Finding of Fact that is more correctly a Conclusion of Law is hereby incorporated as such by this reference.
6. Staff reserves the right to supplement the record of the case to respond to matters and information raised subsequent to the writing of this report.

# RECOMMENDATION

Based upon the application, Findings of Fact, and Conclusions of the staff report, staff recommends that the Planning Commission *approve* the shoreline substantial development permit subject to the following conditions of approval:

1. The following city permits must be obtained prior to construction activities: sewer connection permit, Flood Development permit, and Right-of-Way permit.

2. All applicable permits (local, state, & federal) shall be secured before any construction activities begin. Copies of applicable local, state, and federal permits must be provided with your city sewer connection permit application, including but not limited to WA Dept. of Labor & Industries electrical permit.
3. Prior to issuance of the sewer connection permit, the Port of Anacortes shall enter into an agreement with the City of Anacortes in accordance with AMC Ch. 13.40 - Wastewater Collection and Treatment System, on forms acceptable to the City Attorney.
4. Prior to sewer connection permit final and pump-out operation, the Port of Anacortes shall provide as-built drawings to the Anacortes Public Works Department and provide a Construction Completion Report signed by the Engineer of Record.
5. A flow meter and sample point must be provided on-site (outside of public right-of-way). Location shall be accessible to city staff and must be constructed in accordance with City standards.
6. All general avoidance and minimization measures listed in the *No Effects Evaluation* by Grette Associates dated February 2025 shall be followed.
7. Q'elech'ilhch Park shall not be used to access the project site or to store construction materials. This includes crossing city land and launching from the park to access the project site.
8. Best Management Practices (BMPs) for use of the pump-out shall be developed and posted at Curtis Wharf prior to use of the pump-out system.
9. The scope of the project shall not exceed that as set out in the shoreline permit application and shall be valid only for the improvements described within the application materials, except as modified by this decision or other jurisdictional agencies. This permit does not include review or approval of any new uses.
10. Contractor shall incorporate marine related best management practices (BMPs) when conducting the work to prevent materials and debris from entering surface waters. Construction debris will not be allowed to enter surface waters. Construction debris bibs shall be installed at work areas to capture potential debris or materials.
11. The applicant/landowner shall comply with federal statutes including but not limited to: Endangered Species Act, Clean Water Act, Marine Mammal Protection Act, and other federal statutes.
12. The project shall comply with all applicable Shoreline Master Program regulations, including but not limited to those listed above.
13. Development shall comply with AMC 18.16.130 regulating the time limit for shoreline permits as follows:
    - *13.1. Construction, or substantial progress toward completion, must begin within two (2) years after approval of the permit. Substantial progress toward construction shall include, but not limited to, the letting of bids, making of contracts, purchasing of materials involved in development, but shall not include development or uses which are inconsistent with the Shoreline Management Act or the city's master program. In determining the running two-year period hereof, there shall not be included the time during which development was not actually pursued by construction and the pendency of litigation reasonably related thereto made it reasonable not to so pursue; provided, that the city may, in its discretion, extend the two-year time period for a reasonable time based on factors, including the inability to expeditiously obtain other governmental permits which are required prior to the commencement of construction.*
    - *13.2. 5-Year Permit Authorization: If construction has not been completed within five years of approval by the City of Anacortes, the city will review the permit, with prior notice to parties of record, and, upon showing of good cause, either extend the permit for one additional year, or*

*terminate the permit. Prior to the city authorizing any permit extensions, it shall notify any parties of record and the Department of Ecology. Note: Only one single extension is permitted.*

## INFO FOR DEVELOPER

- Applicant must apply for a sewer connection permit and pay applicable permit and connection fees prior to issuance. Plans designed by a licensed engineer must be submitted that show the method of the pipe's attachment to the pier, supports, and how connections are made, along with other information required by the Building or PW Departments. The pipe must be constructed of material that is appropriate to withstand the marine environment conditions.

PCED Received
Date: 02/05/2025
Document received by the Planning, Community & Economic Development Department

CITY OF ANACORTES
PLANNING, COMMUNITY, and ECONOMIC DEVELOPMENT DEPARTMENT

Application Submittal Checklist

# Shoreline Permit

To be used for the following permit types:

- Substantial Development
- Shoreline Variance
- Shoreline Conditional Use
- Anacortes Shoreline Master Program (ASMP)

## REQUIRED SUBMITTAL DOCUMENTS

**ALL APPLICATION TYPES:**

☒ This checklist, completed and signed
☐ Agent Authorization Form, *if applicable*
☒ Project Description
☒ Shoreline Site Development Plan Set
☐ Stormwater Minimum Requirements (MR-1 to 9)
☒ Stormwater Minimum Requirement 2 (SWPPP), ***only if*** *MR 1 to 9 are not required.*
☒ State Environmental Policy Act SEPA checklist (if not exempt per WAC 197-11-800 and AMC 18.04.120)
☒ Joint Aquatic Resources Permit Application (JARPA form), for projects that include work below the OHWM or if another agency permit is required (visit the Governor's ORIA Permitting website to determine other agency permits that may be needed for your project).
☒ Supplemental studies and reports, if applicable (e.g., no net loss analysis and mitigation plan, habitat assessment, biological assessment, critical areas report, geotechnical study, view impact analysis, cultural resource survey, etc.)

**CONDITIONAL USE OR VARIANCE PERMITS ONLY:**

☐ Conditional Use Permit Responses to Criteria - SMP Section 3.1(D)
☐ Variance Permit Responses to Criteria – SMP Section 3.2

**IF APPLICABLE:**

For projects occurring 1) Waterward of the OHWM. 2) Within the shoreline setback. 3) On a site containing a critical area or buffer. 4) Requiring a CUP or Variance. 5) Otherwise required to do so by the Anacortes SMP the following is also required:

☐ A Shoreline No Net Loss Analysis and Mitigation Plan (including DOE-recommended components)



Exhibit # A
Page 1 of 2
Page 17 of 212

☐ Completed checklist: Design techniques for avoiding and minimizing shoreline buffer impacts (for projects proposing development within a shoreline buffer, setback, or vegetation conservation area)

**DEFERRED SUBMITTALS**

☐ Copies of Federal, State, and Local Permits and Approvals (required prior to building permit issuance).
☐ Financial guarantees for performance or maintenance.
☐ As-built drawings of infrastructure and/or mitigation installation (Ecology DIY template can be used for residential and other small mitigation projects).
☐ Mitigation monitoring report (Ecology DIY template can be used for residential and other small mitigation projects).
☐ Title notice documents.

X Kevin Anderson

Sign and date form verifying all required application submittal checklist items are complete.



Exhibit # A
Page 2 of 2

**Planning, Community, & Economic Development Department**
904 6th St. / P.O. Box 947, Anacortes, WA 98221
360-293-1984

PCED Received
Date: 02/05/2025
Document received by the Planning, Community & Economic Development Department

# AGENT AUTHORIZATION FORM

Use this form to authorize someone other than the property owner to apply for permits for the subject property.

Project Name: Curtis Wharf SHore Power and Pump Out

Property Address: 116 O Ave

City, State, Zip: Anacortes, WA 98221

**AUTHORIZATION STATEMENT**

I / we, as the owners of the property identified above, authorize the below listed individual to act as our agent to submit applications, receive correspondence regarding the above-listed application, and sign and to receive notices on my/our behalf.

**DESIGNATED AGENT**

**Agent Name:** We are not using an agent at this time

**Agent Address:** _____

**Agent City, State, Zip:** _____

**PROPERTY OWNER SIGNATURE(S)****

| | | | |
|---|---|---|---|
| **Signature:** | | **Signature:** | |
| **Printed Name:** | Kevin Anderson | **Printed Name:** | |
| **Title:** | Environemntal Specialist | **Title:** | |
| **Company:** | Port of Anacortes | **Company:** | |
| **Date:** | 1/30/2025 | **Date:** | |

**Each property owner listed must have their signature notarized.

REVIEWED FOR PLANNING COMPLIANCE CITY OF ANACORTES

STATE OF WASHINGTON )
) ss.
COUNTY OF SKAGIT

I certify that I know or have satisfactory evidence that _____ is the person who appeared before me, and said person acknowledged that he/she signed this instrument, and acknowledged it as a free and voluntary act for the uses and purposes mentioned in this instrument.

Given under my hand and official seal this _____ day of _____, 20_____

_____
Notary Public

(SEAL) Residing at _____

My appointment expires _____

STATE OF WASHINGTON )
) ss.
COUNTY OF SKAGIT

I certify that I know or have satisfactory evidence that _____ is the person who appeared before me, and said person acknowledged that he/she signed this instrument, and acknowledged it as a free and voluntary act for the uses and purposes mentioned in this instrument.

Given under my hand and official seal this _____ day of _____, 20_____

_____
Notary Public

(SEAL) Residing at _____

My appointment expires _____

REVIEWED FOR PLANNING COMPLIANCE CITY OF SAN JUAN ISLANDS 1891

317 Commercial Ave., Anacortes, WA 98221 | (360) 293-3134 | www.portofanacortes.com

Libby Grage, Planning Manager
Planning, Community, and Economic Development Department
PO BOX 547
Anacortes, WA 98221
2/2/2025

PCED Received
Date: 02/05/2025
Document received by the Planning, Community & Economic Development Department

Dear Ms. Grage,

The Port of Anacortes (Port) submits this project narrative as part of our Shoreline Substantial Development Permit Application for MRT-70 & 71 Curtis Wharf Pump Out and Shorepower.

Introduction:
The Port operates Curtis Wharf, a commercial marine pier, on the shores of Guemes Channel. Curtis Wharf is located directly west of Pier 1 and directly east of Q'elech'ilhch Park (figure 1). Curtis Wharf is used primarily for lay-berthing harbor craft, fitting out vessels, re-fueling, cruise stops, and vessel repairs. More than 400 vessel stops each year are recorded at Curtis Wharf. Curtis Wharf is also the home of a seafood wholesaler/processor and small-scale cold storage. The Port proposes adding amenities to support existing vessel traffic and reduce the environmental burden of operation of Curtis Wharf. The Port proposes adding a commercial pump out facility for vessels to discharge directly into the sanitary sewer and shore power to permit vessels to "cold iron" while at berth. Cold ironing is the process when a vessel shuts down its engines/generator to run systems on grid power, reducing fuel consumption, noise, and emissions.

*Figure 1: Curtis Wharf*

The shore power pedestals will consist of two skid mounted pedestals with reels to allow for maximum pier



Exhibit # C
Page 1 of 8

flexibitly. These will be placed at the NW and NE corners of Curtis Wharf along the bull rail. These will be fed by conduits routed along the bull rail to the transformer just landward of Curtis Wharf. There is sufficient electrical service to support these. There will be minor upgrades to the breakers to facilitate safe use of these whore power pedestals. There are no structural modifications required for this work.

For the pump out facility, a pump with a reel and various fittings will be mounted at the NE corner of Curtis Wharf. The pump will likely be a peristaltic pump with a bypass to allow vessels with internal ejector pumps to discharge directly into the sanitary sewer system. The piping for the system will be undermounted on the pier sloped such that it self-drains and won't require frost protection. An accessible inline sample port and totalizer will be installed to permit City Wastewater staff to draw samples and calculate volumes of discharge. The under pier pipe will transition to underground at the uplands . The alignment of the sewer pipe will continue underground to an existing manhole in O Ave/Railroad Ave. The Port has been in conversation with City Public Works and Wastewater staff to ensure our proposal is suitable. Other than mounting under pier utility hangars and a single penetration of the pier, there are no modifications to Curtis Wharf proposed. Upland excavations will be less than 50 CY and consist entirely of the trenching for the sewer lateral.

Project construction will commence once permits and approvals are issued and weather is suitable. Best estimates for construction to start are late summer 2025. The Port is constrained for construction by current users of the pier (Seafood Processors) and grant funding. The sooner this project is permitted, the sooner we will begin. Construction of the project will utilize equipment and methods typical for construction of this type, including a small excavator, compactors, and dump trucks. The duration of the construction phase of the project will take approximately six weeks.

Shoreline Jurisdiction:
The proposed segregation curb will occur within shoreline zone. The site is zoned Marine Shipping (MS) and within the Urban Maritime (UM) shoreline environmental designation. Curtis Wharf is an active commercial pier and part of the Port's marine terminal, serving maritime commerce. The proposed utility upgrades are essential to reducing blackwater discharges to the Puget Sound, near-port and in-water noise, emissions, and increasing the amenities for current levels of vessel traffic. The proposed project supports the existing uses at the marine terminal and permitted in the UM shoreline designation.

Critical Areas:
No critical areas or environmentally sensitive areas are within the project footprint. The site is a FEMA mapped flood hazard zone; however, the utilites proposed area on an overwater structure and will be flood resistant.

Special Note on DR 6.4.22:

| Chapter 4 | MASTER PROGRAM ELEMENTS | RESPONSE |
|---|---|---|
| 4.7.1 | Preserve, protect, enhance and restore critical areas and shoreline ecological processes and functions through regulatory and non- regulatory means that may include required vegetated shoreline setbacks, acquisition of key properties, regulation of development, and incentives to encourage ecologically sound design and maintenance. | *The project site is a highly modified industrial site with no critical areas. Additional shoreline enhancements and protections are beyond the scope of the project.* |
| 4.7.3 | Achieve no net loss of shoreline ecological functions. This shall be accomplished by the use of Mitigation Sequencing, as defined in this master program, and as provided by WAC 173-26-201(2)(e). | *The project will not result in the loss of shoreline ecological functions. The project does not have a mechanism to impact shoreline ecological function.* |

| | | |
|---|---|---|
| 4.7.4 | Identify unique and sensitive shoreline areas for permanent protection. | *No known unique or sensitive areas will be impacted.* |
| 4.7.7 | Develop and design performance standards which will minimize detrimental impacts of development upon the shoreline. | *Applicable performance standards will be followed.* |
| 4.7.8 | Encourage study and monitoring of waters and shoreline habitats; maintain awareness of existing conditions and future alterations. | *Beyond the scope of this project.* |
| 4.7.11 | All soils disturbed by use activities, and which are potentially erodible or unstable should be stabilized through seeding, mulching, terracing or other effective means. | *TESC measures will be used to prevent sedimentation of the construction runoff during construction of the project.* |
| 4.7.12 | Development on unique or fragile shoreline areas should be avoided unless it can be shown in the proposal that development will not degrade the shoreline, or that the development will enhance public use of shoreline resources while fully mitigating for impacts to fragile areas. | *The scope of the work is limited and will not impact the shoreline.* |
| 4.7.13 | Shorelines are to be kept free of discarded waste materials. | *Contractors will practice good housekeeping BMPs and keep the project area clean and prevent waste from reaching the shoreline. Construction BMPs will be in place to prevent wastage and spillage.* |
| 4.7.14 | Existing street rights-of-way or utility easements which offer physical or visual access to the shorelines or water body should be maintained in public ownership for resource conservation and as a recreational and public view resource. | *The project will not impact access points at the terminus of O avenue or at Q'elech'ilhch Park.* |
| 4.7.18 | The maximum width for either the wetland buffer or the shoreline setback must be applied for the portion of the wetland that lies within the shoreline setback. | *The project area, including the shoreline, does not contain any wetlands or wetland buffers.* |

| CHAPTER 5 | URBAN MARATIME SHORELINE ENVIRONMENT DESIGNATION | RESPONSE |
|---|---|---|
| 5.11.1 | Give preference to water-dependent transportation, shipping, Port, and manufacturing uses due to their proximity to deep shipping berths and channels and to navigable waters. | The project supports is part of a Port sponsored project in support of water dependent shipping and transportation uses. |
| 5.11.2 | Encourage expansion of water-dependent and water-related uses. | *The project supports water dependent uses.* |

| | | |
|---|---|---|
| 5.11.6 | Industrial and commercial development along Urban Maritime shorelines should provide protection of existing ecological functions where practicable and mitigated. It should also provide public access opportunities only where appropriate and where public safety would not be compromised and alternative off-site provision has been made. | *The site is a highly modified industrial site with negligible ecological function. The project will not impact existing shoreline ecology or processes. Public access to the site is not appropriate for safety reasons but adjacent public access points will be maintained.* |
| 5.11.7 | Where desirable and practicable, industrial and commercial facilities should be designed to facilitate pedestrian waterfront activities. The Port of Anacortes Integrated Approach to Public Access, October 2003 is incorporated by reference, and substitutes for uniform public access agreements. | *Public access to the site are neither appropriate nor desirable because of maritime and public safety concerns. However, adjacent pubic access points will be maintained.* |
| DR 5.11.2 | Require, where applicable, new development and/or redevelopment to include environmental cleanup (e.g., removal of contaminated soils) and restoration of the shoreline in accordance with state and federal requirements. | *Project site is adjacent to the Quiet Cove Cleanup but will not impact the cleanup site in any meaningful way.* |
| DR 5.11.3 | No net loss of shoreline ecological function shall result from new development. | *The project will not impact ecological function of the shoreline from its construction or operation. The site is highly modified with no vegetation or natural substrates. The proposed utility updates are on the existing pier and its construction will have a de minimus footprint. BMPs will be used during construction to prevent erosion and sedimentation (See 6.3.2).* |
| DR 5.11.5 | Redevelopment and renewal of substandard, degraded, or obsolete urban shoreline areas shall be encouraged in order to make maximum use of the available shoreline resources and to accommodate future water-oriented uses. | *Keep Curtis Wharf a viable component of the waterfront infrastructure the Port of Anacortes maintains.* |
| DR 5.11.9 | New, permanent buildings and structures shall be set back a minimum of twenty-five (25) feet from the ordinary high water mark. Setbacks are measured landward, on a horizontal plane, perpendicular to the shoreline. Shoreline setback requirements shall apply to non-water- dependent | The proposed utility upgrades support water dependent industrial uses. See DR 5.11.10 below. |
| DR 5.11.10 | Developments consisting of water-dependent scientific, historical, industrial, commercial, cultural, or educational research uses, public access, water-oriented recreation and ecological restoration are not required to meet the setback requirements, nor are piers, ramps or docks. | The proposed project supports water dependent industrial uses and is exempt from 5.11.09. |

| CHAPTER 6 | ENVIRONMENTAL PROTECTION IMPACTS, MITIGATION, BONDING | RESPONSE |
|---|---|---|
| 6.3.1 | Protect the environment through implementation of this Master Program including the use of the AMRRCM mitigation sequence. | *Acknowledged* |

| | | |
|---|---|---|
| 6.3.2 | Minimize the adverse impacts of shoreline developments and activities on the shoreline environment during all phases of development (e.g., design, construction, operation, and management). | *TESC measures will be implemented during construction. The project will provide updated stormwater treatment to improve water quality. The site will have operations source control BMPs in place to prevent ongoing impacts.* |
| 6.3.3 | Assure, at a minimum, that development and use within shoreline jurisdiction results in no net loss of ecological functions necessary to sustain shoreline natural resources. Development activities shall protect existing ecological functions and ecosystem-wide processes. | *The site has limited ecological value and the scope of the work will not result in a net loss of ecological function.* |
| DR - 6.3.1 | All shoreline development and activity shall be located, designed, constructed, and managed in a manner that avoids, minimizes and/or mitigates adverse impacts to the environment. The preferred mitigation sequence (avoid, minimize, rectify, reduce, or compensate for the environmental impact) shall follow that listed in WAC 173-26-201((2) (e), see also definition of "Mitigation" listed in this Master Program, Chapter 12). | *Acknowledged. The project is sited to avoid impacts to critical areas and sensitive habitats.* |
| DR - 6.3.2 | In approving shoreline developments, the City of Anacortes shall ensure that shoreline development, use, and/or activities will result in no net loss of ecological functions necessary to sustain shoreline resources, including loss that may result from the cumulative impacts of similar developments over time to the extent consistent with constitutional and statutory limitations on the regulation of private property. To this end, the City may require modifications to the site plan and/or adjust or prescribe project dimensions, intensity of use, and screening as deemed appropriate. If impacts cannot be avoided through design modifications, the City shall require mitigation commensurate with the project's adverse impacts. | *Acknowledged, the proposed project is a continuation of the existing use of the site and will not result in a net loss of ecological function. The site is already highly modified from the natural state and the improvements will be entirely within the footprint of the existing pier.* |
| 6.4.1 | Protect against adverse impacts to the public health, to the land and its vegetation and wildlife, and to waters of the state and their aquatic life. In-stream structures that protect and preserve ecosystem-wide processes, ecological functions, and cultural resources, including, fish and fish passage, wildlife and water resources, shoreline critical areas, hydrogeological processes, and natural scenic vistas are of particular importance. | *Acknowledged.* |
| DR-6.4.2 | All shoreline permits shall contain provisions that require developers to comply with all applicable state law requirements regarding preservation of archaeological and historic resources, including provisions to stop work and notify the appropriate agencies should protected resources be uncovered during excavation. | *The site is not of known cultural resource or historic value. An inadvertent discovery plan will be implemented for the construction phase of the project.* |
| DR-6.4.3 | Archaeological sites located both in and outside shoreline jurisdiction are potentially subject to chapter 27.44 RCW (Indian graves and records) and chapter 27.53 (Archaeological sites and records) and chapter 25.48 WAC (Archaeological excavation and removal permits) as well as the provisions of this section. | *The site is not of known cultural resource or historic value.* |

| | | |
|---|---|---|
| DR-6.4.4 | Where archaeological or historic sites have been identified, the City may require public access consistent with constitutional and statutory limitations, provided the development is consistent with the provisions for public access and provided further it is determined that public access to the site will not damage or reduce the cultural value of the site. | *The site is not of known cultural resource or historic value.* |
| DR-6.4.5 | All shoreline uses and activities shall be located, designed, constructed and managed to minimize interference with beneficial natural shoreline processes such as littoral drift, sand and gravel movement, erosion, and accretion. For projects proposing clearing and grading see Section 6.5 Vegetation Conservation, Chapter 9 Specific Modification Policies and Development Regulations. | *This project's construction and operation will not affect shoreline processes as designed.* |
| DR-6.4.6 | Gravel and sand bars and other accretion shore forms are naturally unstable environments. They are valued for recreation and in some cases may provide habitat. Therefore, new development on these shore forms is prohibited and modification shall be allowed only to protect existing occupied structures. Furthermore, developments that could disrupt the processes benefiting these shore forms shall be carefully evaluated and allowed only when the impacts of such disruption can be adequately mitigated, and where there is a demonstrated public benefit. | *Project will not extend to or below the OHW mark.* |
| DR-6.4.7 | An erosion and sedimentation control plan shall be submitted with a permit application for activities that involve the removal of vegetation, stockpiling of earth or other materials, or any activity that could result in shoreline erosion or siltation. Said program shall conform to the City of Anacortes' Engineering Design Standards and shall at minimum, utilize Best Management Practices (BMPs) to prevent shoreline erosion and siltation. | *A detailed TESC plan is included on the site plans.* |
| DR-6.4.8 | Noise emanating from a shoreline use/activity shall be muffled so as to not to interfere with the designated use of adjoining properties. This determination shall take into consideration ambient noise levels, intermittent beat, frequency, and shrillness. Shoreline developments/activities shall comply with the maximum permissible noise levels and time limits set forth in Anacortes Municipal Code Chapter 17.54. Exception: This regulation does not apply to fog horns, tsunami warning or other emergency warning systems | *Construction noise associated with a variety of construction equipment would occur for the duration of the project. This could include truck engines, generators and other small engines, excavators, backhoes, and other equipment. Construction noise would occur during daylight hours as permitted by City of Anacortes noise ordinances. The expected noise levels are not significantly different than those from the uses Curtis Wharf.* |
| DR-6.4.15 | All shoreline developments shall be located, designed, constructed, and operated so as not to be a hazard to public health and safety. | *The project as designed is unlikely to be a public health hazard.* |
| 6.5.2 | Limit alteration of the natural landscape to the minimum necessary to accommodate the shoreline development or a landscape plan developed in conjunction with the shoreline development, or to remove invasive vegetation. | *The site is highly modified and far removed from its natural state; there is no vegetation on site presently.* |

| | | |
|---|---|---|
| 6.5.4 | Tree removal is to be minimized on City shorelines. Place priority on retention of snags and live trees that provide nesting or perching for eagles, other raptors, or priority species. | *No trees at the site.* |
| 6.5.5 | Use best management practices (BMPs) during clearing and grading to control erosion. | *TESC BMPs will be used during construction per the TESC plan.* |
| DR-6.5.3 | All clearing and grading activities shall be limited to the minimum necessary for the intended development. | *Acknowledged. Clearing and grading are expensive enterprises and we will limit these activities to the largest degree possible.* |
| DR-6.5.4 | Exposed soils shall be immediately developed or revegetated to prevent erosion. | *TESC BMPs will be used during construction per the TESC plan. Scheduling will avoid exposure of bare soils to rainfall to prevent erosion to the largest degree possible.* |
| DR-6.5.11 | All shoreline development and activity shall use effective measures to minimize increases in surface water runoff that may result from clearing and grading activity. The applicant must implement best management practices in compliance with Chapter 5, Clearing, Grading, and Erosion Control under the City's Engineering Design Standards. Submittal requirements may include a plan addressing species removal, revegetation, irrigation, erosion and sedimentation control, and other methods of nearshore/riparian corridor protection in accordance with the City's Engineering Design Standards. | *Construction of the project will follow a TESC plan that meets all applicable requirements.* |
| 6.6.1 | Protect unique, rare, and fragile environments, including wetlands and fish and wildlife habitat conservation areas, from impacts associated with development. | *The project will not impact any unique, rare, or fragile environments. None of these are within the project footprint.* |
| 6.6.2 | Locate and design development to minimize risks to people, property and other critical areas associated with geologically hazardous areas, frequently flooded areas, and tsunamis. | *The project is located outside of frequently flooded areas (see attached memo on the floodplain mapping) and proposed use is appropriate for the degree of geological hazard.* |

| Chapter 9 | FILL | *RESPONSE* |
|---|---|---|
| 9.7.1 | Fill should be located, designed, and constructed to protect shoreline ecological processes and functions. | *Minor structural fill may be imported as needed to support on-site use and will not interrupt shoreline processes.* |
| 9.7.3 | Fill waterward of the ordinary high water mark should be permitted only by Shoreline Conditional Use Permit when necessary to accommodate water-dependent uses; public access; expansion or alteration of transportation facilities of statewide significance currently located on the shoreline and then only upon a demonstration that alternatives to fill are | *No fill waterward of OWH is proposed.* |

| | | |
|---|---|---|
| | not feasible; a transportation facility, utility, or navigational structure with no feasible alternative; cleanup and disposal of contaminated sediments as part of an interagency environmental clean-up plan; disposal of dredged material considered suitable under and conducted in accordance with the Dredged Material Management Program of the Department of Natural Resources, Department of Ecology and U.S. Army Corps of Engineers; and public access. | |
| DR-9.7.1 | Fill for water-dependent uses and for public use shall be given priority. | *Acknowledged. The proposed amenities will support water dependent uses at Curtis Wharf.* |
| DR-9.7.2 | Fill shall be permitted only when in conjunction with a proposal or activity otherwise permitted under the SMP. | *Pier 2 is an allowable water dependent use within the MS zone and urban maritime SED.* |
| DR-9.7.3 | Fill waterward of the ordinary high water mark is permitted by Shoreline Conditional Use Permit only when necessary to accommodate water-dependent uses, and for maintenance and repairof existing structures; expansion or alternation of transportation facilities of statewide significance currently located on the shoreline and then only upon a demonstration that alternatives to fill are not feasible; a transportation facility, utility, or navigational structure with no feasible alternative; cleanup and disposal of contaminated sediments as part of an interagency environmental clean-up plan; disposal of dredged material considered suitable under and conducted in accordance with the Dredged Material Management Program of the Department of Natural Resources; mitigation or compensation actions and ecological restoration including beach nourishment or enhancement projects when significant impacts can be mitigated; and public access. | *No fill waterward of OHWM is proposed.* |
| DR-9.7.4 | Projects shall be located and designed to minimize the area of fill necessary to accommodate the use. | *Fill for the project is minimal and limited to required amounts for construction of the sewer lateral.* |
| DR-9.7.5 | Applications for fill shall address impacts to wetlands and streams; aquatic habitats; flooding; sediment transport; navigation, and public access. The following information may be required: physical and biological characteristics of the fill site, source and quality of fill material, grading plan showing the site, adjacent properties and waters, method of placement and compaction, type of proposed surfacing and runoff control, method of erosion control and stabilization, and proposed use of the fill area. Fill that will result in significant adverse impacts that cannot be mitigated is prohibited. | *No adverse impacts will result from fill placement.* |
| DR-9.7.6 | Fill shall be provided with some means for erosion control and/or shoreline stabilization consistent with the policies and regulations of Section 9.11, Shoreline Stabilization Measures and Flood Protection Works. | *Soil stabilization will be provided as needed. TESC measures will be in place during construction to prevent erosion on site.* |

PCED Received
Date: 02/05/2025
Document received by the Planning, Community & Economic Development Department

DEPARTMENT OF ECOLOGY
State of Washington

# Design Considerations for Avoiding and Minimizing Shoreline Buffer Impacts

The following design techniques can contribute to the avoidance and minimization of impacts to shoreline buffers or areas set aside for the conservation of vegetation. This checklist is a resource for local governments and should be completed by applicants proposing development within a shoreline buffer, setback, or vegetation conservation area. Check 'yes' for all design techniques that have been incorporated.

| Yes | Design technique | Notes on how project incorporates technique |
|---|---|---|
| ☐ | Use alternative, space-saving septic design (non-conventional) | N**A** |
| ☐ | Reposition structures and/or access to the lot | N**A** |
| ☐ | Cluster structures | T**he shore power and pump out facility are co-located** |
| ☐ | Decrease building footprint (e.g. add stories, reduce total square footage, reduce deck area, etc.) | NA |
| ☐ | Reduce the width of access roads or driveways | NA |
| ☐ | Build a road pull off for extra parking where it will reduce the amount of new impervious surfaces within the buffer | NA |
| ☐ | Request variances from common property line setbacks if it will help avoid or minimize impacts | NA |
| ☐ | Focus development in existing disturbed areas | Project is located at an existing disturbed site (a marine terminal) |
| ☐ | Use no-excavation or minimal-excavation technologies for building foundations (e.g., pin foundations) | NA |
| ☐ | Avoid grading by incorporating natural topography into site design | Existing topography will be maintained. |
| ☐ | Avoid or minimize the removal of native trees and shrubs through site | NA |



Exhibit # D
Page 1 of 4
Page 29 of 212

| Yes | Design technique | Notes on how project incorporates technique |
|---|---|---|
| | design and by incorporating plants already on site into landscape design | |
| ☐ | Use pervious materials for construction of hard surfaces | NA |
| ☐ | Disperse downspouts to vegetated areas or into rain gardens instead of impervious surfaces | NA |
| ☐ | Install signage and/or wildlife-permeable fencing at boundaries of protected areas | NA |

# Recommended Components: Shoreline No Net Loss Analysis and Mitigation Plan

## Project description

☒ Describe the nature and intensity of the proposed use or activity in sufficient detail to allow analysis of the effect of the land use change on shoreline habitat and functions.

## Existing conditions

☒ Identify and assess existing conditions at the project site including its physical and biological characteristics using a combination of text, maps, and plans.

☒ Describe the ecological functions of the existing conditions and how they contribute to the shoreline. This may require the consideration of these ecological functions within the larger system.

☒ Include site photographs that document existing conditions.

## Project impacts

☒ **Mitigation sequencing analysis.** Discuss how the project proposes to implement the mitigation sequencing steps, in their listed order, to achieve no net loss of shoreline ecological functions. In other words, a project must first be designed to avoid (step 1) impacts altogether before minimizing unavoidable impacts (step 2) and so on. Discuss how the application of the mitigation sequence influenced design decisions related to a project's location, scope, timing, size, materials, construction methods, etc.

1. **Avoiding** the impact altogether by not taking a certain action or parts of an action;

   **Project as designed will avoid impacts.**

2. **Minimizing** impacts by limiting the degree or magnitude of the action and its implementation by using appropriate technology or by taking affirmative steps to avoid or reduce impacts;

3. **Rectifying** the impact by repairing, rehabilitating, or restoring the affected environment;

4. **Reducing** or eliminating the impact over time by preservation and maintenance operations;

5. **Compensating** for the impact by replacing, enhancing, or providing substitute resources or environments; and

6. **Monitoring** the impact and the compensation project and taking appropriate corrective measures.

☐ **Unavoidable impacts.** For projects with unavoidable impacts, identify and quantify impacts to shoreline functions and habitat. Show the location and extent of impacted areas, including temporary construction-related impacts, using a combination of text, plans, drawing, and photos. Projects that result in unavoidable shoreline impacts must complete a Proposed Mitigation Plan (see item 4 below). If trees will be removed, indicate the number, species, diameter (measured at 4 feet above ground level), and show their locations on a site plan/map.

## Proposed mitigation plan (Required when a project will result in unavoidable impacts.)

☐ **Proposed Mitigation.** Show where and how mitigation is proposed using a combination of text, drawings, plans, and maps. Include the location of wildlife-safe fencing and signage.

☐ **Goal and Objectives.** Define achievable mitigation goals and objectives.

☐ **Performance Standards.** Identify performance standards (i.e., success criteria) for measuring the success of mitigation over time.

☐ **Contingency plan.** Describe when and what actions will be taken if mitigation efforts fail, or only partially succeed, in meeting performance standards and goals.

☐ **Monitoring program.** Describe the proposed monitoring schedule, monitoring methods, and measurable data to be collected. The proposed monitoring program should be appropriate for the scale and scope of the project. The shoreline administrator will provide a schedule for submitting monitoring progress reports.

☐ **Financial assurance.** A performance bond or other security to ensure that mitigation work is completed may be necessary. Provide a detailed cost estimate for the proposed mitigation program.

☐ **Permanent protection.** A permanent conservation covenant, conservation easement, or other assurance of protection in perpetuity may be required. If known, provide details on the method/mechanism for permanent protection.

*power*

# SEPA ENVIRONMENTAL CHECKLIST

## Purpose of checklist

Governmental agencies use this checklist to help determine whether the environmental impacts of your proposal are significant. This information is also helpful to determine if available avoidance, minimization, or compensatory mitigation measures will address the probable significant impacts or if an environmental impact statement will be prepared to further analyze the proposal.

## Instructions for applicants

This environmental checklist asks you to describe some basic information about your proposal. Please answer each question accurately and carefully, to the best of your knowledge. You may need to consult with an agency specialist or private consultant for some questions. **You may use "not applicable" or "does not apply" only when you can explain why it does not apply and not when the answer is unknown.** You may also attach or incorporate by reference additional studies reports. Complete and accurate answers to these questions often avoid delays with the SEPA process as well as later in the decision-making process.

The checklist questions apply to **all parts of your proposal,** even if you plan to do them over a period of time or on different parcels of land. Attach any additional information that will help describe your proposal or its environmental effects. The agency to which you submit this checklist may ask you to explain your answers or provide additional information reasonably related to determining if there may be significant adverse impact.

## Instructions for lead agencies

Please adjust the format of this template as needed. Additional information may be necessary to evaluate the existing environment, all interrelated aspects of the proposal and an analysis of adverse impacts. The checklist is considered the first but not necessarily the only source of information needed to make an adequate threshold determination. Once a threshold determination is made, the lead agency is responsible for the completeness and accuracy of the checklist and other supporting documents.

## Use of checklist for nonproject proposals

For nonproject proposals (such as ordinances, regulations, plans and programs), complete the applicable parts of sections A and B, plus the Supplemental Sheet for Nonproject Actions (Part D). Please completely answer all questions that apply and note that the words "project," "applicant," and "property or site" should be read as "proposal," "proponent," and "affected geographic area," respectively. The lead agency may exclude (for non-projects) questions in "Part B: Environmental Elements" that do not contribute meaningfully to the analysis of the proposal.

PCED Received
Date: 02/05/2025
Document received by the Planning, Community & Economic Development Department

# A. Background Find help answering background questions

## 1. Name of proposed project, if applicable:

Port of Anacortes Curtis Wharf Environmental Improvements Project

## 2. Name of applicant:

Port of Anacortes (Port)

## 3. Address and phone number of applicant and contact person:

Applicant: Kevin Anderson
Environmental Specialist
Port of Anacortes
317 Commercial Ave
Anacortes, Washington 98221
(360) 299-1827

Agent:

## 4. Date checklist prepared:

October 25th, 2024

## 5. Agency requesting checklist:

Port of Anacortes

## 6. Proposed timing or schedule (including phasing, if applicable):

Project construction, currently proposed for 2025, will not begin until all required permits and approvals are obtained. The Project will adhere to all applicable timing windows, as mandated in the applicable permits.

## 7. Do you have any plans for future additions, expansion, or further activity related to or connected with this proposal? If yes, explain.

Yes, there is scheduled maintenance for the asphalt paved areas of Curtis Wharf underway (fall of 2024.) The existing asphalt is in poor condition and will be repaired. The Port anticipates asphalt repairs to be complete prior to the work considered in this checklist.

## 8. List any environmental information you know about that has been prepared, or will be prepared, directly related to this proposal.

- Joint Aquatic Resources Permit Application (JARPA) for submittal to local, state, and federal regulatory agencies
- Local permit application materials for submittal to the City of Anacortes Planning, Community, and Economic Development Department

**9. Do you know whether applications are pending for governmental approvals of other proposals directly affecting the property covered by your proposal? If yes, explain.**

No.

**10. List any government approvals or permits that will be needed for your proposal, if known.**

- State Environmental Policy Act (SEPA) determination from the SEPA lead agency (Port of Anacortes)
- Unites States Army Corps of Engineers (USACE) Letter of Permission
- Hydraulic Project Approval (HPA) from the Washington Department of Fish and Wildlife (WDFW)
- Shoreline Substantial Development Permit (SSDP) from the City of Anacortes
- Other local permits from the City of Anacortes (i.e. Building and Right-of-Way Permits)

**11. Give a brief, complete description of your proposal, including the proposed uses and the size of the project and site. There are several questions later in this checklist that ask you to describe certain aspects of your proposal. You do not need to repeat those answers on this page. (Lead agencies may modify this form to include additional specific information on project description.)**

The Port of Anacortes (Port) proposes to improve amenities at Curtis Wharf on the Guemes Channel to lessen the environmental burden of the operation of the facility (Figure 1). Curtis Wharf is an approximately 63,000 square foot overwater wharf, with associated uplands, that was originally built in the early 1900s, reconstructed in 1992 and extended in the late 1990s. Curtis Wharf is a heavily used commercial pier at the Port's Marine Terminal. Curtis Wharf supports commercial vessels and water dependent uses (Figures 2 through 4). Currently, vessels calling at Curtis Wharf consist of tugboats, large fishing vessels, oil spill response vessels, and inland waterway cruise ships. Curtis Wharf is used as a lay berth for minor maintenance, fueling, watering, fitting out, and crew changes. Cruise ships disembark passengers for tours and excursions. Curtis Wharf also houses a seafood wholesaler and processor specializing in live and cooked crab.

Proposed Work:
The proposed work includes two components: installation of a commercial vessel pump out and installation of a mobile shore power skid for harbor craft. The installation of a vessel pump out ensures vessels comply with local no discharge zones and the new shore power will allow vessels to reduce their use of diesel-powered generators while at berth. These two separate project components will likely be installed concurrently at Curtis Wharf.

Commercial Pump Out:
The proposed vessel sewage collection design includes mounting a peristaltic pump to the northeast corner of Curtis Wharf with an adjacent bypass force main connection for vessels with internal sewage ejection pumps. The pump will be installed inside a heated enclosure with an integrated hose rack. Basic red/green activation controls will be located on the exterior of the enclosure for operating the pump. Backflow preventors will be installed downstream of the pump and downstream of the bypass force main connection. An integrated hose rack will be provided including various adaptor fittings for use connecting the vessel equipment with the pumping system or bypass line. Vessels without internal sewage ejection pumps will utilize an integrated hose for connecting to the peristaltic pump. Vessels with internal sewage ejection pumps will utilize the hose associated with their system to connect to the force main bypass connection (using adaptor fittings as needed).

The force main will be suspended below the wharf by utility brackets, transitioning to buried piping where the wharf meets land. The force main piping below the wharf would be gradually sloped towards land and vented to

allow the system to drain residual sewage freely into the sanitary sewer between uses removing the need for frost protection. The force main length is short enough that the peristaltic pump's design capacity is capable of conveying vessel sewage directly to the existing City sanitary sewer manhole in O Avenue/Railroad Avenue.

The maximum discharge rate of the pump out facility will be limited to approximately 50 gallons per minute (gpm) with the integrated peristaltic pump and 250 gpm from internal vessel ejector pumps. These are provisional flow rates and will be subject to change during design and permitting. Anticipated maximum usage is one vessel daily with a typical blackwater tank volume of approximately 1,000 gallons. There may be occasional users with larger volumes to discharge, but these are not anticipated to be routine. The Port has been in coordination with the City of Anacortes Wastewater Treatment Plant and Public Works during initial design and will continue this coordination. A flowmeter will be installed for billing purposes and a sampling hatch for City staff to verify the strength of waste being discharged to the Anacortes Wastewater Treatment Plant. The Port will enter into a discharge agreement with the City of Anacortes and purchase capacity prior to the pump out operation.

Shore Power Pedestals:
To improve electric service for vessels calling at Curtis Wharf (to allow for shore power rather than reliance on a vessel's diesel generators) a provision of 200-amp, 480 volt, 3-phase pedestals is needed. There is sufficient electrical service at the site for this level of shore power. The existing service switchboard and panelboard will be reused for these loads; however, several breakers will need to be replaced or updated at the panel. The scope of this portion of the project includes a mobile shore power system to be installed at two berth positions at Curtis Wharf and provide cold-ironing power[1] to multiple types of vessels, such as tractor tugs, articulated tug barge combos, or fishing vessels. For increased use flexibility of the pier, the shore power pedestals will be mounted on skids for easy relocation. This system considers maximum utilization of the existing electrical system and capacity at the site and includes multiple connector types, as well as a metering system. Currently, the Port has not finalized a location for the skid pedestals but anticipates installing two pedestals on the face of Curtis Wharf. These will be mounted on a skid and easily moved by forklift. The conduit run will be undermounted or routed along the bullrails using appropriate armored conduit for marine use. The final route and length of conduit will be determined during final design.

The shore power pedestals will allow vessels to cold iron their onboard engines and auxiliary generators while at berth by connecting to the shore-based electrical grid. This is beneficial for several reasons: reduces emissions and noise and allows for less down time for equipment maintenance and reduces fuel costs for vessels. As part of the project, the Port will track greenhouse gas (GHG) offsets from the operations of the shore power at Curtis Wharf and report these to the Department of Ecology and Washington State Department of Transportation. The final form of the skid-based system will be determined by a combination of cost, function, and availability.

**12. Location of the proposal. Give sufficient information for a person to understand the precise location of your proposed project, including a street address, if any, and section, township, and range, if known. If a proposal would occur over a range of area, provide the range or boundaries of the site(s). Provide a legal description, site plan, vicinity map, and topographic map, if reasonably available. While you should submit any plans required by the agency, you are not required to duplicate maps or detailed plans submitted with any permit applications related to this checklist.**

The proposed project site address is 116 O Avenue, Anacortes, Skagit County, Washington. Curtis Wharf is located on the northern shore of Fidalgo Island along the Guemes Channel and is best accessed by 2nd Street via O Avenue in the City of Anacortes.

[1] Provision of electrical shore power to a vessel while it's docked/berthed, instead of the vessel using it's own onboard engines.

Latitude: 48.52154
Longitude: -122.61489

Project activities will take place at Curtis Wharf within the Port of Anacortes Marine Terminal.

# B. Environmental Elements

## 1. Earth Find help answering earth questions

**a. General description of the site:**
**Circle or highlight one: Flat, rolling, hilly, steep slopes, mountainous, other:**

The site consists of a virtually flat upland (parking areas and access roads) and pavement atop a flat steel and wood pile-supported deck. Beneath the deck is a treated wood bulkhead wall and rip rap shoring (from top of bank down to around 0 ft Mean Lower Low Water (MLLW)), and a gradually sloped mudflat below 0 ft MLLW to -24 ft MLLW.

**b. What is the steepest slope on the site (approximate percent slope)?**

The steepest slope is located beneath the wharf ( the vertical bulkhead wall).

**c. What general types of soils are found on the site (for example, clay, sand, gravel, peat, muck)? If you know the classification of agricultural soils, specify them, and note any agricultural land of long-term commercial significance and whether the proposal results in removing any of these soils.**

Upland substrates and materials (landward of the wharf) consist mostly of sand and silts deposited as fill material when the site was originally developed overlaying glaciomarine drift soils.

**d. Are there surface indications or history of unstable soils in the immediate vicinity? If so, describe.**

No. There are no surface indications or history of unstable soils in the immediate vicinity. However, portions of the uplands (landward of the wharf) include areas of historic filling, which means the area could be susceptible to liquefaction or subsidence during a major seismic event.

**e. Describe the purpose, type, total area, and approximate quantities and total affected area of any filling, excavation, and grading proposed. Indicate source of fill.**

To the extent possible, grading and fill will be limited to the portion of the project where sewer pipes suspended under Curtis Wharf shift to buried pipes at the transition from the pier to the uplands. Excavation will be sufficient to bury sewer pipes and maintain a sloped connection such that black water can freely flow to the manhole in O Ave/Railroad Avenue. The depth of these excavations will be calculated during final design. At present it is estimated that fewer than 50 cubic yards of excavation are anticipated for this project.

Excavated materials from the upland trench will be re-used as fill at the site or hauled to an appropriate upland facility and structural fill imported if native fill isn't suitable for reuse.

**f. Could erosion occur because of clearing, construction, or use? If so, generally describe.**

Yes, however erosion is not likely to occur due to the relatively flat upland surfaces and the minimal areas of excavation. Most of the work does not disturb soils. Best Management Practices (BMPs) for sediment and erosion control will also minimize the potential for erosion near marine surface waters. Examples of BMPs include a temporary erosion and sediment control plan for the site, use of wattles, storm drain filters, silt fences, and covering disturbed soils if left unattended for more than 48 hours.

**g. About what percent of the site will be covered with impervious surfaces after project construction (for example, asphalt or buildings)?**

Presently the entire site, both the approximately 63,000 square foot overwater structure and associated uplands, is impervious surfaces in a mix of concrete, asphalt, buildings, and compacted gravel.

**h. Proposed measures to reduce or control erosion, or other impacts to the earth, if any.**

Contractors will be required to implement standard BMPs for erosion control during active construction and excavation. These BMPs shall include the prevention of debris and dirt from entering nearby marine surface waters.

## 2. Air Find help answering air questions

**a. What types of emissions to the air would result from the proposal during construction, operation, and maintenance when the project is completed? If any, generally describe and give approximate quantities if known.**

During construction, equipment and necessary transportation vehicles (trucks) will generate exhaust levels and fuel odors typical of normal equipment operating conditions. However, these will be temporary in duration. No adverse long-term impacts are anticipated as the existing use of Curtis Wharf remains unchanged.

Operation of the proposed improvements will improve air quality by allowing vessels berthed at Curtis Wharf to idle their engines and auxiliary generators by connecting to shore power. This will reduce both GHG emissions and diesel particulate matter. Clean, grid-based electricity allows vessels to cold iron and run their shipboard systems on shore power. The amount of diesel and GHG offset by using the system will be tracked and reported. The Port conservatively estimates the operation of the shore power facility will reduce diesel consumption by vessels at Curtis Wharf by approximately 3,200 gallons and $CO_2e$ by nearly 33 metric tons annually[2].

The project will also reduce the number of marine vacuum (marvac) visits to the site. Currently, vessels require a marvac to pump out their blackwater tanks. Marvacs are diesel powered pumps mounted on diesel trucks. Pumping out with a marvac can take several hours and the entire time the marvac's pumps run creating both emissions and noise. We have not quantified the possible impact of the reduction in marvacs.

**b. Are there any off-site sources of emissions or odor that may affect your proposal? If so, generally describe.**

No off-site emission or odor sources have been identified, although Curtis Wharf is part of an active marine terminal and there are operations in the vicinity that may generate emissions and odors on occasion such as seafood processing.

[2] Calculated using 2022 EPA Port Mobile Emissions Inventory Guide tables G.1, 4.3, and 4.4 and are conservative estimates.

Cargo handling equipment, seafood processing, and vessel operations at Curtis Wharf can all contribute to both emissions and odors at Curtis Wharf. Overall, the project will reduce the amount both GHG and diesel particulate matter from the operations of Curtis Wharf by reducing emissions form vessel generators and engines, and reduced number of marvac visits to pump out blackwater tanks.

**c. Proposed measures to reduce or control emissions or other impacts to air, if any.**

Construction equipment is always required to comply with applicable off-road fuel and emissions standards.

Upon completion of the project, the Port will enact a policy requiring vessels that are able to use shore power to connect to shore power for stays at Curtis Wharf over a certain duration (as determined by the operational requirements of vessels). This policy will require vessels at Curtis Wharf to use shore power and offset emissions during their stay. While the project is in the initial stages of development policy has yet to be drafted; implementation of this policy is a requirement of our funding for this project.

## 3. Water Find help answering water questions

**a. Surface Water:** Find help answering surface water questions

**1) Is there any surface water body on or in the immediate vicinity of the site (including year-round and seasonal streams, saltwater, lakes, ponds, wetlands)? If yes, describe type and provide names. If appropriate, state what stream or river it flows into.**

Yes. The project takes place on the shores of Guemes Channel, Puget Sound. Fidalgo Bay is located immediately north of the project site. Curtis Wharf is located within Water Resource Inventory Area (WRIA) 3, Lower Skagit-Samish.

**2) Will the project require any work over, in, or adjacent to (within 200 feet) the described waters? If yes, please describe and attach available plans.**

Yes. Installation of both a commercial pump out and shore power on Curtis Wharf will require work over the water and in lands adjacent to the shore. The proposed work will involve installation of new appurtenances on the surface of Curtis Wharf and utility servcice. Pipes and possibly electrical conduit will also be suspended under the surface of the pier to buried pipes at the transition from the pier to the uplands. No in-water work is proposed. See Figure 5 for the preliminary layout and design.

**3) Estimate the amount of fill and dredge material that would be placed in or removed from surface water or wetlands and indicate the area of the site that would be affected. Indicate the source of fill material.**

No fill or dredge material proposed.

**4) Will the proposal require surface water withdrawals or diversions? Give a general description, purpose, and approximate quantities if known.**

No.

**5) Does the proposal lie within a 100-year floodplain? If so, note location on the site plan.**

The project site is an overwater structure, but the beach below lies within a 1% annual chance flood hazard area..

**6) Does the proposal involve any discharges of waste materials to surface waters? If so, describe the type of waste and anticipated volume of discharge.**

No. Upland (where sewer pipes suspended under Curtis Wharf shift to buried pipes at the shoreline) could increase the risk of erosion and construction debris entering surface waters. However, during construction, contractors will be required to adhere to all federal, state, and local requirements and permit conditions for both the in-water and upland work.

Installation of the commercial pump out is designed to reduce discharges of blackwater to the waters of the state. Having an available and accessible pump out for harbor craft allows these vessels to avoid discharging their blackwater tanks into the waters of the Salish Sea. The pump out will be metered so the Port can track volumes of sewage discharged to the Anacortes Wastewater Treatment Plant.

**b. Ground Water:** Find help answering ground water questions

**1) Will groundwater be withdrawn from a well for drinking water or other purposes? If so, give a general description of the well, proposed uses and approximate quantities withdrawn from the well. Will water be discharged to groundwater? Give a general description, purpose, and approximate quantities if known.**

No.

**2) Describe waste material that will be discharged into the ground from septic tanks or other sources, if any (domestic sewage; industrial, containing the following chemicals...; agricultural; etc.). Describe the general size of the system, the number of such systems, the number of houses to be served (if applicable), or the number of animals or humans the system(s) are expected to serve.**

No waste material will be discharged.

**c. Water Runoff (including stormwater):**

**1) Describe the source of runoff (including storm water) and method of collection and disposal, if any (include quantities, if known). Where will this water flow? Will this water flow into other waters? If so, describe.**

Short-term impacts to water quality around the shoreline could result if construction BMPs are not followed. However, while a National Pollution Discharge Elimination System (NPDES) General Construction Stormwater Permit is not required for this project (due to the small upland area that will be disturbed during construction), appropriate BMPs are always required by the USACE, WDFW, and City of Anacortes permits and implemented to prevent erosion and sedimentation into marine waters and to identify, reduce, eliminate, or prevent stormwater contamination and water pollution from construction activity.

Upland construction, as part of this project, will not change the flows of stormwater from the upland areas into the existing stormwater collection system. Stormwater will sheet flow generally eastward and south across the wharf deck to catch basins in 2nd Street and O Avenue, conveyed into a stormwater treatment vault, and thence discharged into Guemes Channel.

**2) Could waste materials enter ground or surface waters? If so, generally describe.**

No waste materials will enter ground or surface waters. Construction BMPs will be proposed to avoid construction-related spills and discharges during construction. During operation, balcwater will be collected from vessels and discharged to the City-owned wastewater treatment plant. Operational BMPs will be posted visibly so users avoid practices that could release blackwater. Example BMPs include verifying correct fittings prior to discharge, calling Ecology and Port staff if there is a spill, and a prohibition on discharging hazardous or flammable materials.

**3) Does the proposal alter or otherwise affect drainage patterns in the vicinity of the site? If so, describe.**

No changes to the upland drainage patterns near the site are proposed or anticipated.

**d. Proposed measures to reduce or control surface, ground, and runoff water, and drainage pattern impacts, if any.**

BMPs for both in-water and upland construction will be adhered to). Before construction, BMPs will be implemented to prevent erosion and sedimentation and to identify, reduce, eliminate, or prevent ground or surface water contamination and water pollution from construction activity. BMPs will be consistent with all federal, state, and local requirements.

Upland construction, as part of this project, will not change the practice of directing stormwater from parking areas into the existing stormwater collection system on O Avenue.

## 4. Plants Find help answering plants questions

**a. Check the types of vegetation found on the site:**

- ☐ **deciduous tree: alder, maple, aspen,**
- ☐ **evergreen tree: fir, cedar, pine, other**
- ☐ **shrubs**
- ☒ **grass**
- ☐ **pasture**
- ☐ **crop or grain**
- ☐ **orchards, vineyards, or other permanent crops.**
- ☐ **wet soil plants: cattail, buttercup, bullrush, skunk cabbage, other**
- ☐ **water plants: water lily, eelgrass, milfoil, other**
- ☒ **other types of vegetation**

There is no observed upland or aquatic vegetation at Curtis Wharf. All vegetation checked above occurs adjacent to Curtis Wharf. To the east of Curtis Wharf dune grasses and mixed herbaceous plants occur along the northern portion of Railroad Avenue. To the west of Curtis Wharf, common noxious weeds (common fennel, blackberry, and scotch broom occur) and are mixed with dune grass.

No eelgrass is known to exist offshore at the site.

**b. What kind and amount of vegetation will be removed or altered?**

The proposed project will not result in the removal or alteration of any vegetation as there is no vegetation present in the project alignment.

**c. List threatened and endangered species known to be on or near the site.**

None known.

**d. Proposed landscaping, use of native plants, or other measures to preserve or enhance vegetation on the site, if any.**

None proposed.

**e. List all noxious weeds and invasive species known to be on or near the site.**

None have been identified within the immediate project site, although invasive Himalayan blackberry (*Rubus bifrons*), common fennel, and scotch broom occur directly west of Curtis Wharf.

## 5. Animals Find help answering animal questions

**a. List any birds and other animals that have been observed on or near the site or are known to be on or near the site.**

**Examples include:**

- **Birds: hawk, heron, eagle, songbirds, other:**
- **Mammals: deer, bear, elk, beaver, other: otter, whale and pinniped species**
- **Fish: bass, salmon, trout, herring, shellfish, other:**

Several bald eagle nesting territories occur in the vicinity, primarily near Fidalgo Bay, West Guemes Channel, and Guemes Island. A great blue heron nesting colony is on March Point approximately 4.5 miles southeast of the site. Several osprey nesting territories also occur in the Anacortes area, but these are located inland. Numerous waterfowl and shorebirds also use the area, primarily in the winter and during migration.

Fish resources in Guemes Channel area include Pacific salmon, forage fish, and a number of flatfish and pelagic species typical of Puget Sound. Surf smelt (*Hypomesus pretiosus*) and sand lance (*Ammocytes hexapterus*) are important forage fish for salmonids. Surf smelt require high intertidal beaches with gravel for spawning. Sand lance also require upper intertidal spawning habitat, with sandy gravel beaches. Although the steep intertidal shorelines at Curtis Wharf do not provide suitable spawning habitat for these species, surf smelt spawning has been mapped as occurring directly west of Curtis Wharf and Q'elech'ilhch Park. Sand lance spawning activity occurs on beaches from May to September, unlike adjacent spawning beaches across Fidalgo Bay, which receive smelt spawn virtually year-round. The nearest known sand lance spawning beach is in the north shore of Fidalgo Island at Ship Harbor, over 2 miles west of the project site.

**b. List any threatened and endangered species known to be on or near the site.**

Species listed under the federal Endangered Species Act (ESA) that may be present in the vicinity of the project area include:

- Puget Sound Chinook Salmon (*Oncorhynchus tshawytscha)*
- Coastal-Puget Sound Bull Trout (*Salvelinus confluentus)*
- Puget Sound Steelhead Trout (*Oncorhynchus mykiss)*
- Bocaccio (*Sebastes paucispinis*)
- Yelloweye rockfish (*Sebastes ruberrimus*)
- Southern Resident Killer Whale (*Orcinus orca)*
- Humpback Whale (*Megaptera novaeangliae)*
- Leatherback Sea Turtle (*Dermochelys coriacea)*
- Marbled Murrelet (*Brachyramphus marmoratus)*

**c. Is the site part of a migration route? If so, explain.**

Salmonids transit Guemes Channel as it is a migratory route for anadromous salmonids from Skagit and Swinomish systems. The Puget Sound area is part of the Pacific flyway. Birds that inhabit the area vary seasonally due to migration. Nearby Fidalgo Bay provides over-wintering areas for migratory waterfowl.

**d. Proposed measures to preserve or enhance wildlife, if any.**

None proposed.

**e. List any invasive animal species known to be on or near the site.**

Invasive animal species that may be found on or near the site include some species of small animals and birds (i.e. European starling [*Sturnus vulgaris*], etc.).

## 6. Energy and Natural Resources Find help answering energy and natural resource questions

**a. What kinds of energy (electric, natural gas, oil, wood stove, solar) will be used to meet the completed project's energy needs? Describe whether it will be used for heating, manufacturing, etc.**

Curtis Wharf will be supplied by Puget Sound Energy (PSE, the electrical utility) for electricity service. The current level of service is sufficient to support skid mounted charging pedestals; the service at the site of 1,200 amps is sufficient to support proposed new shore power along with the existing lights and the impressed current cathodic protection system. The Port purchases renewable energy certificates (RECs) for electricity from PSE to reduce our GHG footprint.

**b. Would your project affect the potential use of solar energy by adjacent properties? If so, generally describe.**

No. The use of solar energy by adjacent properties will not be affected.

**c. What kinds of energy conservation features are included in the plans of this proposal? List other proposed measures to reduce or control energy impacts, if any.**

None proposed.

## 7. Environmental Health Find help with answering environmental health questions

**a. Are there any environmental health hazards, including exposure to toxic chemicals, risk of fire and**



Exhibit # E
Page 11 of 28
Page 43 of 212

**explosion, spill, or hazardous waste, that could occur because of this proposal? If so, describe.**

Petroleum products, used by the existing Curtis Wharf users, or to run construction equipment, do provide an ongoing risk for spills, leaks, and fires. However, the Port's strict enforcement of BMPs as required by the Green Marine[3], and the Port's policies and procedures that focus on preventing pollution from work and activities on vessels or docks, minimizes these types of risks.

BMPs for use of the pump out will be developed and posted at Curtis Wharf. The expected users of the commercial pump out are professional mariners and are expected to be familiar with using similar systems. BMPs for the use of the pump out system include provisions of no discharge of chemicals, oil, or other hazardous materials, posted notification number in the case of spills, and the use of air fresheners in vessel bathrooms to eliminate persistent odors.

**1) Describe any known or possible contamination at the site from present or past uses.**

Upland directly south of Curtis Wharf is the Quiet Cove Cleanup Site (listed by the Washington State Department of Ecology).Historical site operations began as a bulk fuel terminal and storage facility as early as 1909. The oil tanks and associated structures were removed in the 1970s. From the 1970s until 2013 site operations included a storage yard for marine vessels and recreational vehicles and office and warehouse space for various marine-related sales and services. The Port of Anacortes purchased the site in July 2013 and conducted an interim action cleanup in 2020 removing approximately 8,500 cubic yards of contaminated materials from the site. Future investigations into sediment contamination at the beach adjacent to the site to the northwest are in planning and not well defined at present.

**2) Describe existing hazardous chemicals/conditions that might affect project development and design. This includes underground hazardous liquid and gas transmission pipelines located within the project area and in the vicinity.**

Upland construction will require both design and construction methods to adhere to the applicable federal, state, and local standards.

**3) Describe any toxic or hazardous chemicals that might be stored, used, or produced during the project's development or construction, or at any time during the operating life of the project.**

Potential discharges to surface waters during construction include accidental spills or leakage of petroleum products from construction equipment. Potential discharges after the project is complete could include accidental spills of fuels or wastewater and refuse from vessels at Curtis Wharf.

The Port's strict enforcement of BMPs required by the Green Marine, and the Port's policies and procedures that focus on preventing pollution from work and activities on vessels or docks, will also continue to minimize these types of risks. BMPs include a prohibition on discharge of hazardous materials, oils, bilge water, and other materials and notification in the case of spills and releases.

**4) Describe special emergency services that might be required.**

None anticipated.

[3] Green Marine is a voluntary environmental certification program to improve maritime operations beyond requirements of regulations.



Exhibit # E
Page 12 of 28
Page 44 of 212

**5) Proposed measures to reduce or control environmental health hazards, if any.**

Construction activities will be required to meet standard local, state, and federal regulations.

As described above, the Port's strict enforcement of BMPs required by the Green Marine program and the Port's policies and procedures that focus on preventing pollution from work and activities on vessels or docks minimizes these types of risks.

**b. Noise**

**1) What types of noise exist in the area which may affect your project (for example: traffic, equipment, operation, other)?**

Existing sources of noise in the area include automobile and truck traffic, seafood processing activities, occasional aircraft flyovers, upland commercial and industrial activities including marvacs and adjacent boat and ship traffic noise.

**2) What types and levels of noise would be created by or associated with the project on a short-term or a long-term basis (for example: traffic, construction, operation, other)? Indicate what hours noise would come from the site)?**

Construction noise will occur associated with a variety of construction equipment during daytime (working) hours. This could include truck and crane engines, small engines, excavators, backhoes, and other heavy equipment.

Long-term noise at Curtis Wharf is expected to be reduced. Utilization of the proposed shore power system will reduce noise impacts to near-port communities, and beneath the surface of the water, by allowing vessels to shut down auxiliary generators and main engines onboard while at berth. The proposed commercial pump out will reduce the number of marvacs that operate at Curtis Wharf.

**3) Proposed measures to reduce or control noise impacts, if any.**

Construction noise will be limited to daytime hours, anticipated to be 7:00 am to 7:00 pm. The project will comply with environmental noise standards set by the State of Washington, WAC 173-60, which establishes limits on the level and duration of noise crossing property boundaries. Temporary construction noise is exempt from state noise limits during daytime hours, per WAC 173-60-050(3)(a).

The adoption of a policy requiring suitable vessels to connect to shore power will spur usage of the system and drive down noise associated with vessel engines and generators at the marine terminal.

## 8. Land and Shoreline Use Find help answering land and shoreline use questions

**a. What is the current use of the site and adjacent properties? Will the proposal affect current land uses on nearby or adjacent properties? If so, describe.**

The Port of Anacortes Marine Terminal is a deep-water port positioned strategically between Seattle, Washington, and Vancouver, British Columbia that services break bulk cargo, high and heavy projects, and moorage services. The Marine Terminal consists of three centrally located working piers (Pier 1, Pier 2, and Curtis Wharf) with direct access to an established heavy haul route to the state highway system.

The focal point of the project lies at Curtis Wharf nestled in the northwest corner of the Marine Terminal. Predominantly serving as a working wharf and dock for commercial harbor craft and ships, Curtis Wharf offers moorage facilities for up to two vessels simultaneously, with a wharf length extending to 320 ft, additional mooring dolphins allow for vessels up to 480 ft to moor, the depth of the pier is 24 ft at MLLW. Curtis Wharf is heavily used by vessels in the Salish Sea with more than 200 tug calls, 50 days of cruise vessel berthings, and other harbor craft calling at the pier annually.

Curtis Wharf is used as a commercial pier primarily serving harbor craft and commercial vessels (large fishing vessels, articulated tug-barges, oil spill response vessels). The pier also houses a seafood processor and wholesaler. Adjacent upland uses are mostly industrial with marine laydown space, rope manufacturers, seafood processors. The sole exception is the adjacent Q'elech'ilhch Park, a public park in the Anacortes Parks system. Q'elech'ilhch Park is named after the village that Samish citizens created on these shores and remains an important cultural and public access point for the water.

**b. Has the project site been used as working farmlands or working forest lands? If so, describe. How much agricultural or forest land of long-term commercial significance will be converted to other uses because of the proposal, if any? If resource lands have not been designated, how many acres in farmland or forest land tax status will be converted to nonfarm or nonforest use?**

No. The project site has not been used as working farmlands or working forest lands.

**1) Will the proposal affect or be affected by surrounding working farm or forest land normal business operations, such as oversize equipment access, the application of pesticides, tilling, and harvesting? If so, how?**

No. The site is not surrounded by working farmlands or working forest lands and will therefore not adversely affect those sites and activities.

**c. Describe any structures on the site.**

Curtis Wharf is an overwater pier that is 320-foot at the bullrail. The pier has sections that are constructed of treated wood piles, pile caps, stringers, and decking overlain with asphalt and portions that are constructed with steel pipe pile supporting cast-in-place pile caps and deck panels. A seafood processing plant is located at Curtis Wharf; this structure is a single skinned metal building. Reefer units, shipping containers, and portable buildings are also located on Curtis Wharf; the numbers and configuration of these change with the varied utilization of the pier.

**d. Will any structures be demolished? If so, what?**

No structures will be demolished.

**e. What is the current zoning classification of the site?**

Current City of Anacortes Zoning identifies Curtis Wharf as Manufacturing and Shipping (MS).

**f. What is the current comprehensive plan designation of the site?**

The current comprehensive plan designation of the site is also (MS).

**g. If applicable, what is the current shoreline master program designation of the site?**

The 2010 Shoreline Environment Designation Map identifies the Curtis Wharf shoreline as being designated as Urban Maritime. The City of Anacortes is currently updating its current shoreline master program.

**h. Has any part of the site been classified as a critical area by the city or county? If so, specify.**

Current regulations identify the project site as being located near an area with a 1% annual chance flood hazard area.

**i. Approximately how many people would reside or work in the completed project?**

No people reside at Curtis Wharf and this will not change as part of the project.

Up to 100 people work at the seafood processing plant, located immediately landward of the wharf. This number varies according to seasonal peaks in seafood landings. Vessels using Curtis Wharf for lay berths range in the number of crew from approximately 4 crew for tugs to upwards of 30 crew for inland cruise vessels. Curtis Wharf has more than 400 calls annually by vessels for lay berth, fitting out, fueling and watering, and repairs.

**j. Approximately how many people would the completed project displace?**

None.

**k. Proposed measures to avoid or reduce displacement impacts, if any.**

None proposed as displacement will not occur.

**l. Proposed measures to ensure the proposal is compatible with existing and projected land uses and plans, if any.**

Approval for this project will be obtained from all federal, state, and local City agencies with jurisdiction. The proposed project would add environmental and user amenities to Curtis Wharf and there will be no change in use of the facility. No incompatible uses are proposed. The project will require shoreline, land use, and development permits issued by the City of Anacortes. Curtis Wharf is an approved existing use under City code.

**m. Proposed measures to reduce or control impacts to agricultural and forest lands of long-term commercial significance, if any.**

The project will not have impacts on agricultural or forest lands.

## 9. Housing Find help answering housing questions

**a. Approximately how many units would be provided, if any? Indicate whether high, middle, or low-income housing.**

None.

**b. Approximately how many units, if any, would be eliminated? Indicate whether high, middle, or low-income housing.**



Exhibit # E
Page 15 of 28
Page 47 of 212

None.

**c. Proposed measures to reduce or control housing impacts, if any.**

None proposed.

## 10. Aesthetics Find help answering aesthetics questions

**a. What is the tallest height of any proposed structure(s), not including antennas; what is the principal exterior building material(s) proposed?**

The tallest extant structure on Curtis Wharf are the light poles. These are approximately 25 feet tall. The seafood processing plant on Curtis Wharf is approximately 18 feet in height.

**b. What views in the immediate vicinity would be altered or obstructed?**

No views in the immediate vicinity will be altered or obstructed as a result of the proposed project. The proposed project will bring additional deck gear (i.e. shore power skids and pump out station) to Curtis Wharf. These have minimal footprints and are less than six feet in height and will be obscured to the landward by shipping containers, reefers, and other deck gear already in service. From the waterward view the shore power skids and pump out station not prominent or out of character for marine terminal usages. Thus, the proposed project will not alter or obstruct views in the immediate vicinity.

**c. Proposed measures to reduce or control aesthetic impacts, if any.**

None proposed.

## 11. Light and Glare Find help answering light and glare questions

**a. What type of light or glare will the proposal produce? What time of day would it mainly occur?**

Curtis Wharf has two light poles currently; these are shielded and directed LED lights that provide security and working light for the pier. These, depending on funding availability, may be updated during the project to provide a better sufficiency of lighting for security and commercial activities at the pier. Any new lighting will adhere to dark sky principles and be sized to illuminate the deck of the pier and minimize light spillage into the water and the neighboring community.

Vessels using Curtis Wharf in darkness have their work lights on to aid in mooring and navigation. While at berth, the work lights are typically damped and only navigational lights and safety lights for crew operations remain lighted. The Port requires unnecessary lights to be dimmed while vessels are at berth at the Marine Terminal.

During the construction phase of the project, work will be completed during daylight hours. There may be supplemental work lighting deployed during morning and afternoon work at the site during winter hours but will be limited to the hours between 7:00 am and 7:00 pm.

**b. Could light or glare from the finished project be a safety hazard or interfere with views?**

Any new lighting proposed for Curtis Wharf will be hooded and directed onto the dock surface and positioned to reduce glare and off-site impacts. Lighting will be compliant and follow guidelines from the International Dark Sky Association.

**c. What existing off-site sources of light or glare may affect your proposal?**

There are no off-site sources of light that will affect the proposed project.

**d. Proposed measures to reduce or control light and glare impacts, if any.**

Any new Curtis Wharf lighting will only focus on pier surface and not impact any surrounding areas. The lighting provided by the project will follow applicable guidelines from the International Dark Sky Association and be hooded and directed to the dock surface.

## 12. Recreation Find help answering recreation questions

**a. What designated and informal recreational opportunities are in the immediate vicinity?**

Directly westward and adjacent to Curtis Wharf is Q'elech'ilhch Park. This day-use park is used by the public for access to the shores of Guemes Channel. It is a place of cultural significance to the Samish Tribe, and the City of Anacortes and Samish Tribe are currently working to improve the visitor experience at the park.

**b. Would the proposed project displace any existing recreational uses? If so, describe.**

None proposed.

**c. Proposed measures to reduce or control impacts on recreation, including recreation opportunities to be provided by the project or applicant, if any.**

None proposed.

## 13. Historic and Cultural Preservation Find help answering historic and cultural preservation questions

**a. Are there any buildings, structures, or sites, located on or near the site that are over 45 years old listed in or eligible for listing in national, state, or local preservation registers? If so, specifically describe.**

No.

**b. Are there any landmarks, features, or other evidence of Indian or historic use or occupation? This may include human burials or old cemeteries. Are there any material evidence, artifacts, or areas of cultural importance on or near the site? Please list any professional studies conducted at the site to identify such resources.**

None are known at Curtis Wharf. Adjacent to the site is the Quiet Cove cleanup site. As part of the cleanup process a cultural resource investigation was conducted that covered parts of Curtis Wharf. This review did not identify any resources at Curtis Wharf.



Exhibit # E
Page 17 of 28
Page 49 of 212

**c. Describe the methods used to assess the potential impacts to cultural and historic resources on or near the project site. Examples include consultation with tribes and the department of archeology and historic preservation, archaeological surveys, historic maps, GIS data, etc.**

The Port conducted preliminary review of both the National Register of Historic Places and the Washington Department of Archaeology and Historic Preservation (DAHP) as part of their due diligence to identify and assess potential impacts to cultural and historic resources. Multiple projects have occurred within the immediate vicinity of the proposed project and no cultural or historic resources have been previously identified. As part of SEPA, the shoreline permitting process, and the federal permitting process, consultation with nearby tribes will also be completed.

**d. Proposed measures to avoid, minimize, or compensate for loss, changes to, and disturbance to resources. Please include plans for the above and any permits that may be required.**

Contractors and workers will be informed to immediately stop work if artifacts of historical or cultural importance are found. If any are found, the DAHP will also be consulted.

## 14. Transportation Find help with answering transportation questions

**a. Identify public streets and highways serving the site or affected geographic area and describe proposed access to the existing street system. Show on site plans, if any.**

Curtis Wharf is located near downtown Anacortes. The primary street access route to the site is from O Avenue, which provides north-south connections from State Route (SR) 20 through the main commercial area of town.

**b. Is the site or affected geographic area currently served by public transit? If so, generally describe. If not, what is the approximate distance to the nearest transit stop?**

The site is most closely served by public transit with a Skagit Transit bus stop located on 6th Street between N and O avenues. This stop is approximately three blocks south from Curtis Wharf.

**c. Will the proposal require any new or improvements to existing roads, streets, pedestrian, bicycle, or state transportation facilities, not including driveways? If so, generally describe (indicate whether public or private).**

The proposed project will not require additional improvements to surface streets, roadways, or transit systems.

**d. Will the project or proposal use (or occur in the immediate vicinity of) water, rail, or air transportation? If so, generally describe.**

Yes. The project is designed to provide amenities to marine traffic calling at Curtis Wharf and reduce the environmental footprint of the facility's operation.

**e. How many vehicular trips per day would be generated by the completed project or proposal? If known, indicate when peak volumes would occur and what percentage of the volume would be trucks (such as commercial and nonpassenger vehicles). What data or transportation models were used to make these estimates?**

The use of Curtis Wharf is anticipated to remain approximately the same. The pump out facility and shore power pedestals are designed to meet the needs of the current users and service levels at Curtis Wharf. The Port anticipates a reduction in marvac traffic to Curtis Wharf, but these are a relatively small portion of the trucks that use the Wharf. The project and is designed to serve current volumes of vessel traffic.

**f. Will the proposal interfere with, affect, or be affected by the movement of agricultural and forest products on roads or streets in the area? If so, generally describe.**

No, the proposal will not interfere with or otherwise affect or be affected by the movement of agricultural and forest products.

**g. Proposed measures to reduce or control transportation impacts, if any**

Temporary impacts from construction on both vehicular and vessel transportation at Curtis Wharf will be minimized by maintaining close coordination with the Marine Terminal users through construction and by complying with the necessary City of Anacortes Building and Right-of-Way Permit conditions (i.e. cones and signs detouring traffic around the upland work area). The construction impacts from the project will be temporary and not expected to last more than several days at the most.

Long-term impacts are not anticipated and measures to reduce impacts are not proposed.

## 15. Public Services Find help answering public service questions

**a. Would the project result in an increased need for public services (for example: fire protection, police protection, public transit, health care, schools, other)? If so, generally describe.**

The use of Curtis Wharf will not change and will not result in an increased need for public services.

**b. Proposed measures to reduce or control direct impacts on public services, if any.**

No measures are proposed.

## 16. Utilities Find help answering utilities questions

**a. Circle utilities currently available at the site: electricity, natural gas, water, refuse service, telephone, sanitary sewer, septic system, other:**

**b. Describe the utilities that are proposed for the project, the utility providing the service, and the general construction activities on the site or in the immediate vicinity which might be needed.**

Improvements to on-dock utilities will include modernizing and increasing the electrical services are at the core of the proposed project. The shore power pedestals will utilize existing electrical infrastructure at Curtis Wharf. The pump out facility will need to be tied to the City sanitary sewerage via a manhole in O Avenue, directly southeast of Curtis Wharf.

## C. Signature Find help about who should sign

**The above answers are true and complete to the best of my knowledge. I understand that the lead agency is relying on them to make its decision.**

X

**Type name of signee:** Michael Brett Greenwood

**Position and agency/organization:** Executive Director, Port of Anacortes

**Date submitted:**

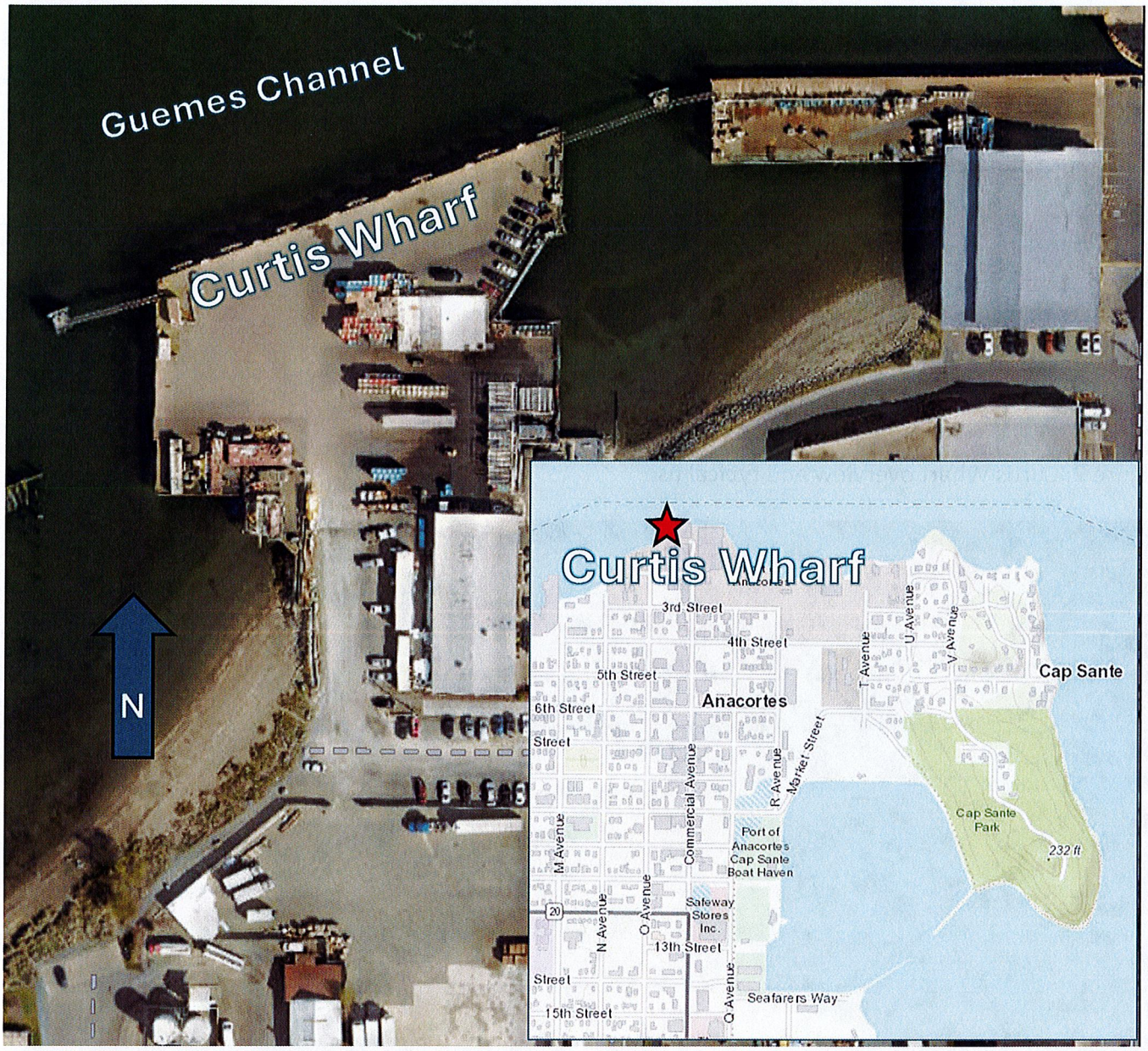


Figure 1: Curtis Wharf Vicinity



Exhibit # E
Page 21 of 28
Page 53 of 212

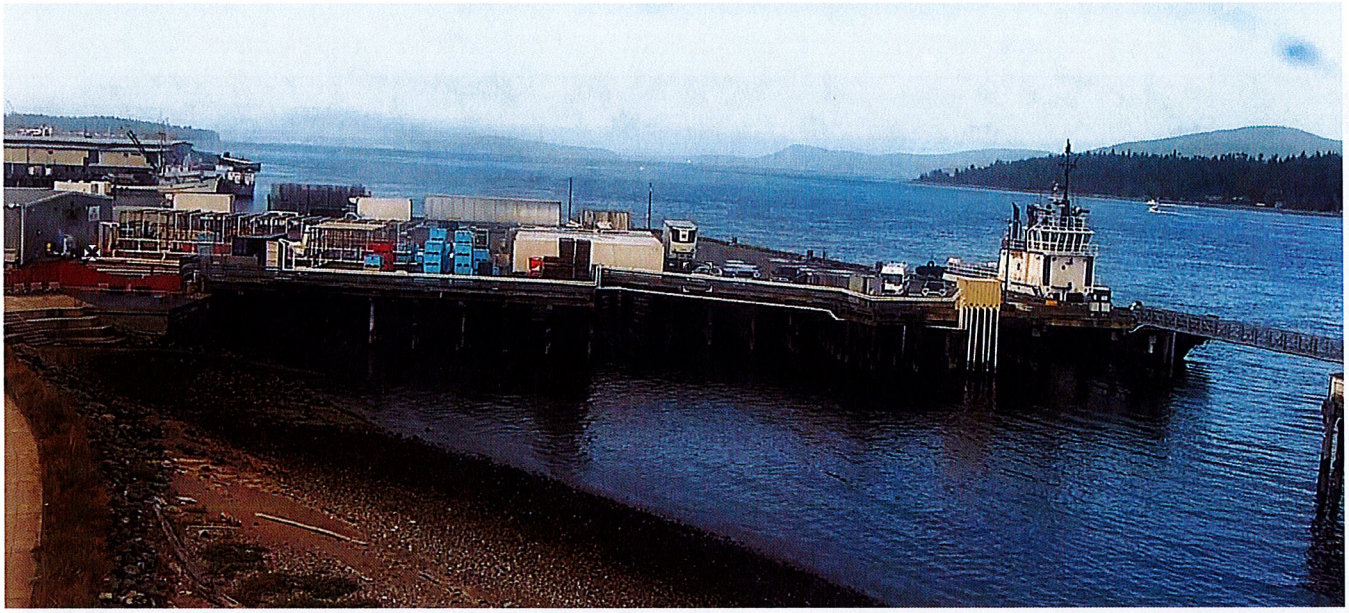

Figure 2: Curtis Wharf overview and typical use

Figure 3: Curtis Wharf Looking East

Figure 4: Curtis Wharf Looking West

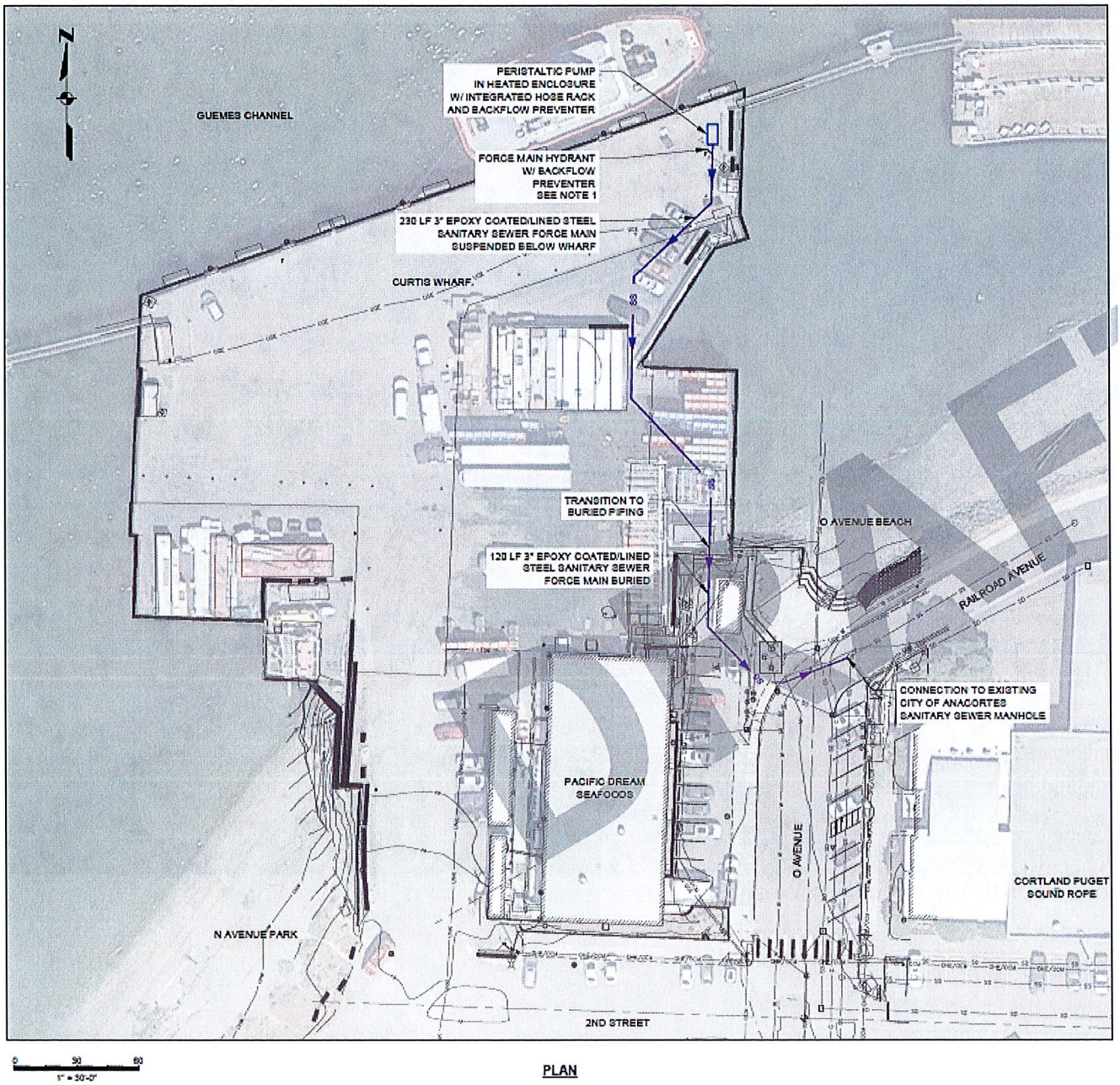


PLAN

Figure 5: Conceptual layout of pipe routing under Curtis Wharf and associated upland routing.

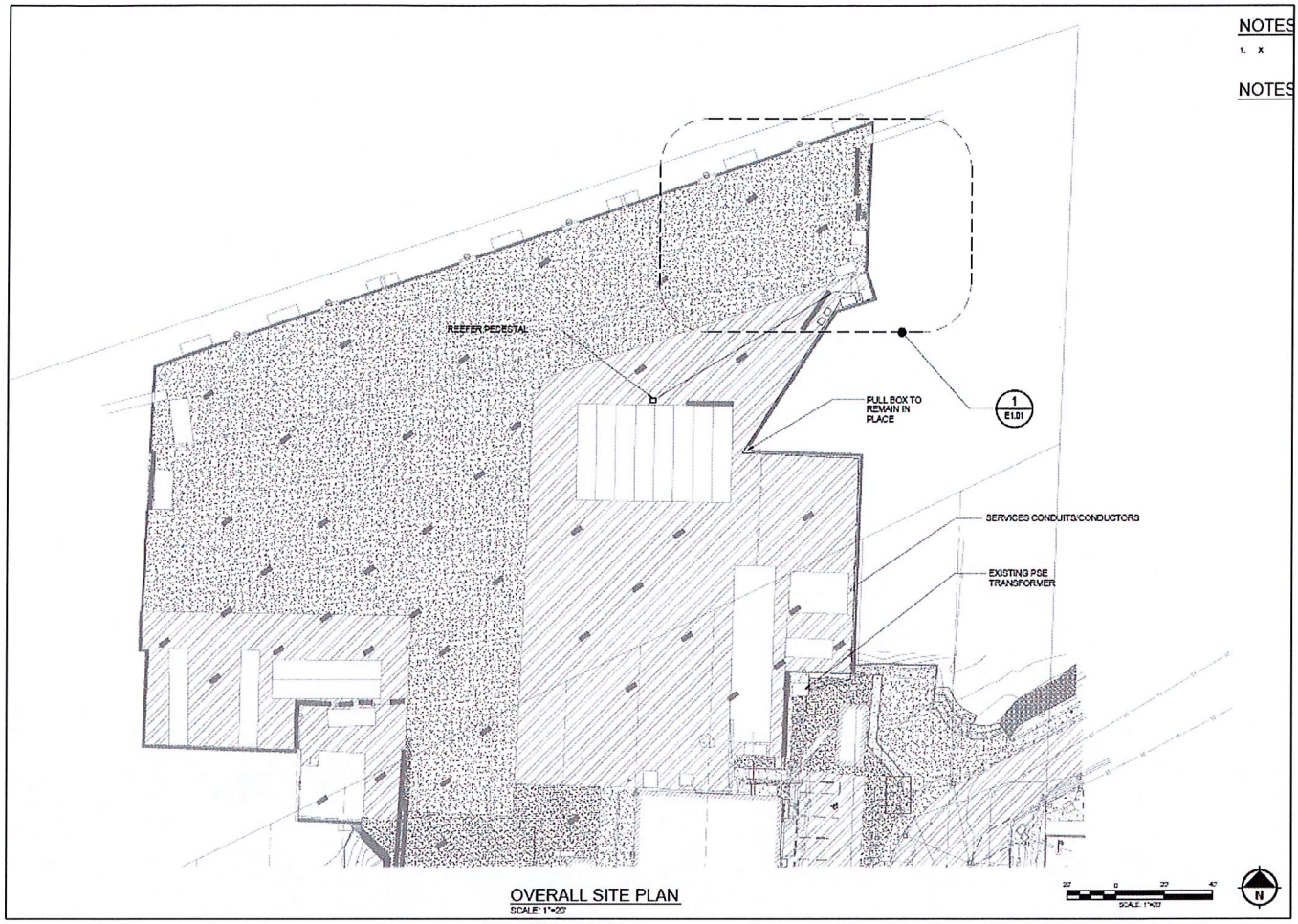


Figure 6: Conceptual layout of electrical conduit routing for shore power at Curtis Wharf.



Exhibit # E
Page 25 of 28
Page 57 of 212

# NOTICE OF DETERMINATION OF NON-SIGNIFICANCE (DNS)

**Project Name:** Curtis Wharf Environmental Improvements

**Location:** Port of Anacortes – Curtis Wharf—116 O Avenue, Anacortes, WA 98221

**Proponent:** Port of Anacortes

**Description of Proposal**: The Port proposes providing two environmental improvements at Curtis Wharf at the Port of Anacortes' Marine Terminal. This work includes two components: a commercial vessel pump out and a mobile shore power skid for harbor craft. These aspects of the project will take place concurrently at Curtis Wharf.

Commercial Pump Out:
The proposed sewage collection design includes a peristaltic pump mounted to the northeast corner of Curtis Wharf. An integrated hose rack will be provided including various adaptor fittings for use connecting the vessel equipment with the pumping system or bypass line. Vessels with internal sewage ejection pumps can discharge directly to the gravity main by using a pump bypass. The force main (3" epoxy coated steel pipe) will be suspended below the wharf by utility brackets, transitioning to buried piping where the wharf meets land.

The maximum discharge rate of the pump out facility will be limited to approximately 50 gallons per minute (gpm) and 250 gpm from internal vessel ejector pumps. Anticipated maximum usage is one vessel daily with a typical blackwater tank volume of approximately 1,000 gallons. There may be occasional users with larger volumes to discharge, but these are not anticipated to be routine. The Port has been in coordination with the City of Anacortes wastewater treatment plant and public works during initial design and will continue this coordination and enter into a discharge agreement.

Shore Power Pedestals:
To serve vessels calling at Curtis Wharf the Port plans to provide two 200-amp, 480 volt, 3-phase shore power pedestals. There is sufficient electrical service at the site. The existing service switchboard and panelboard will be reused for these loads and several breakers will be updated. The shore power will enable multiple types of vessels, such as tractor tugs, articulated tug-barge combos, and fishing vessels to shut down vessel engines and generators at berth. The pedestal will be mounted on a skid and easily moved with a forklift. The conduit run will be undermounted or routed along the bullrails using appropriate armored conduit for marine use. The final route and length of conduit will be determined during final design.

The shore power pedestals will allow vessels to shut down their main engines and auxiliary generators while at berth by connecting to the shore based electrical grid. This practice is known as cold ironing. This practice reduces emissions and noise, increases the maintenance intervals for ship equipment, and reduces fuel costs for vessels. As part of the project, the Port will track GHG offsets from the operations of the shore power at Curtis Wharf and report these to the Department of Ecology and the Washington

State Department of Transportation. The final form of the skid-based system will be determined by a combination of cost, function, and availability. The Port anticipates construction of this phase of the project to take place in the 2025 calendar year.

**Lead Agency:** The lead agency under the State Environmental Policy Act is the Port of Anacortes.

**Comment Period: Determination:** As a lead agency, the Port of Anacortes has determined that this proposal will not have a probable significant adverse impact on the environment; a determination of non-significance (DNS) does not require an environmental impact statement (EIS) under RCW 43.21C.030(2)(c). This determination assumes compliance with federal and state law as well as City of Anacortes ordinances related to general environmental protection. This decision was made after reviewing a completed SEPA environmental checklist and other supporting documents on file with the lead agency. This information is available to the public on request (call 360-299-1810 to request a copy by mail or email) or at the Port's administrative offices at 317 Commercial Avenue, Anacortes, WA 98221. The SEPA Checklist and complete DNS can also be reviewed on the Port's website: www.portofanacortes.com/sepa.

SEPA
Port of Anacortes
317 Commercial Avenue
Anacortes, WA 98221

Comments may also be submitted to the Port via (a) e-mail to SEPA@portofanacortes.com (b) leave comments on the Port's SEPA website (www.portofanacortes.com/sepa) or fax to (360) 293-9608. Comments will not otherwise be accepted by telephone or personal conversation.

**The comment period will end on November 19th, 2024 at 5:00 PM PST.**

Note: Issuance of this threshold determination does not constitute approval of permits. This proposal will be reviewed for compliance with all applicable Federal, State and City of Anacortes regulations.

**Publication Date:** November 6th, 2024

**Signed and dated this October 29th, 2024:** _____

Michael Brett Greenwood
Port of Anacortes SEPA Responsible Official

Plot Date: 1/17/2025 1:12 PM
User: AEKJM MHAJAN
pw:\\kje-pw.bentley.com:kje-pw\Documents\Clients\Anacortes, Port of WA\Projects\Curtis Wharf Pump Out Facility Final Design_1996021.19\10-Design\10.06-Drawings\General\1996021.19-G-001.DWG

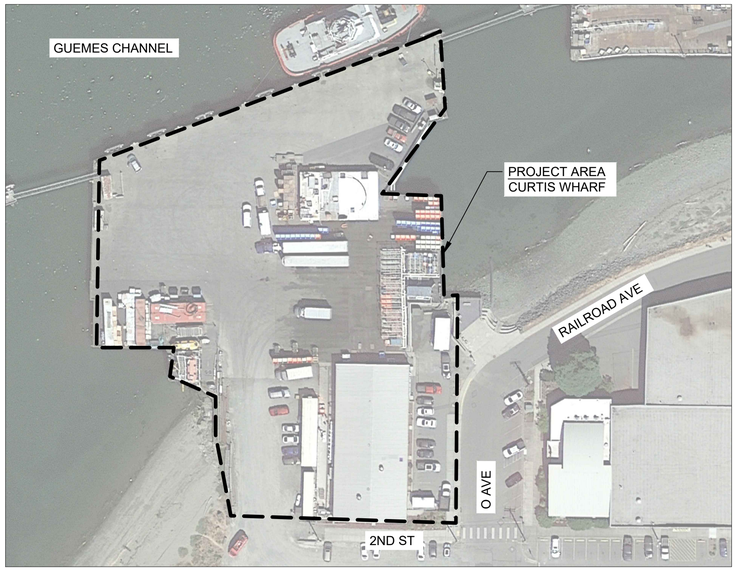


LOCATION MAP
SCALE: NTS

VICINITY MAP
SCALE: NTS

# PORT OF ANACORTES
## ANACORTES, WASHINGTON

# CURTIS WHARF
## COMMERCIAL PUMP OUT FACILITY

### PROJECT PERSONNEL

PORT OF ANACORTES
BRAD TESCH: PROJECT MANGER
317 COMMERCIAL AVE
ANACORTES, WASHINGTON 98221
PHONE: (360) 299-1830

KENNEDY JENKS
SAMANTHA KARPA, PE: PROJECT MANAGER
32001 32ND AVENUE SUITE 300
FEDERAL WAY, WASHINGTON 98001-9601
PHONE: (253) 835-6402

Port of Anacortes

Kennedy Jenks

### 30% DRAWING INDEX


| SHT# | DWG# | SHEET TITLE |
|---|---|---|
| GENERAL | | |
| 01 | G-001 | COVER, LOCATION & VICINITY MAPS, AND DRAWING INDEX |
| 02 | G-002 | GENERAL ABBREVIATIONS |
| 03 | G-003 | GENERAL NOTES AND LEGEND |
| 04 | G-004 | GENERAL EQUIPMENT DESIGNATIONS AND PROCESS IDENTIFICATION CODES |
| 05 | G-005 | GENERAL PROCESS SYMBOLS |
| 06 | G-006 | SITE PLAN, SURVEY CONTROL, AND KEY MAP |
| CIVIL | | |
| 07 | C-001 | CIVIL ABBREVIATIONS AND NOTES |
| 08 | C-002 | CIVIL LEGEND |
| 09 | C-003 | EROSION AND SEDIMENT CONTROL PLAN AND NOTES |
| 10 | C-004 | EROSION AND SEDIMENT CONTROL DETAILS |
| 11 | C-101 | SANITARY SEWER CONVEYANCE PLAN AND PROFILE |
| *12 | C-201 | CIVIL DETAILS |
| MECHANICAL (PROCESS) | | |
| *13 | M-001 | MECHANICAL ABBREVIATIONS AND NOTES |
| *14 | M-101 | PERISTALTIC PUMP OUT EQUIPMENT PACKAGE PLAN AND SECTION |
| ELECTRICAL | | |
| *15 | E-001 | ELECTRICAL NOTES AND ABBREVIATIONS |
| *16 | E-002 | ELECTRICAL LEGEND I |
| *17 | E-003 | ELECTRICAL LEGEND II |
| *18 | E-004 | ELECTRICAL DETAILS |
| *19 | E-005 | ELECTRICAL SITE PLAN |
| *20 | E-006 | ELECTRICAL SINGLE LINE DIAGRAM AND EQUIPMENT ELEVATION |
| *21 | E-007 | PANELBOARD SCHEDULE |
| *22 | E-008 | CONDUIT BLOCK DIAGRAM AND CONDUIT CABLE SCHEDULE |
| *23 | E-009 | MISCELLANEOUS ELECTRICAL PLANS AND DETAILS |


*DENOTES A DRAWING NOT INCLUDED IN THE 30% SUBMITTAL

PCED Received
Date: 02/05/2025
Document received by the Planning, Community & Economic Development Department

30% SUBMITTAL

PRELIMINARY DESIGN PHASE
NOT FOR CONSTRUCTION
THIS DOCUMENT IS AN INTERIM DOCUMENT AND NOT SUITABLE FOR CONSTRUCTION. AS AN INTERIM DOCUMENT, IT MAY CONTAIN DATA THAT IS POTENTIALLY INACCURATE OR INCOMPLETE AND IS NOT TO BE RELIED UPON WITHOUT THE EXPRESS WRITTEN CONSENT OF THE PREPARER.

| NO | REVISION | DATE | BY |
|---|---|---|---|

SCALES
0 — 1"
0 — 25mm
IF THIS BAR IS NOT DIMENSION SHOWN, ADJUST SCALES ACCORDINGLY.

THIS PRELIMINARY DOCUMENT IS NOT FOR CONSTRUCTION. IT IS RELEASED UNDER THE AUTHORITY OF: SAMANTHA KARPA 21024598 JANUARY 2025

DESIGNED KJ
DRAWN AKM
CHECKED SNK

PORT OF ANACORTES
ANACORTES, WASHINGTON
CURTIS WHARF COMMERCIAL PUMP OUT FACILITY

Kennedy Jenks

COVER, LOCATION & VICINITY MAPS, AND DRAWING INDEX

SCALE NTS
JOB NO 1996021.19
DATE JANUARY 2025
SHEET OF ---
G-001

# ABBREVIATIONS

| | |
|---|---|
| # | POUND, NUMBER |
| @ | AT |
| < | LESS THAN |
| > | GREATER THAN |
| Δ | DEFLECTION |
| ∠ | ANGLE |
| ° | DEGREE(-S) (ANGULAR) |
| A | AMPERE(-S) |
| A/C | AIR CONDITIONING |
| A/D | ANALOG TO DIGITAL |
| A/M | AUTO/MANUAL |
| AASHTO | AMERICAN ASSOCIATION OF STATE HIGHWAY TRANSPORTATION OFFICIALS |
| AB | AGGREGATE BASE, ANCHOR BOLT(-S) |
| ABAN(-D) | ABANDON(-ED) |
| ABS | ABSOLUTE, ACRYLONITRILE-BUTADIENE-STYRENE |
| AC | ASPHALTIC CONCRETE, ALTERNATING CURRENT |
| ACH | AIR CHANGES PER HOUR |
| ACI | AMERICAN CONCRETE INSTITUTE |
| ACK | ACKNOWLEDGE |
| ACOUS | ACOUSTIC(-AL) |
| ACP | ASBESTOS CEMENT PIPE |
| ADA | AMERICANS WITH DISABILITIES ACT |
| ADDIT | ADDITIONAL |
| ADJ | ADJUST(-ED,-MENT,-ABLE) |
| ADJT | ADJACENT |
| ADWF | AVERAGE DRY WEATHER FLOW |
| AF | ACRE-FEET, AMPERE FRAME |
| AFCI | ARC-FAULT CIRCUIT INTERRUPTER |
| AFF | ABOVE FINISHED FLOOR |
| AFG | ABOVE FINISHED GRADE |
| AGG | AGGREGATE |
| AI | ANALOG INPUT |
| AIC | AMPERES INTERRUPTING CAPACITY |
| AISC | AMERICAN INSTITUTE OF STEEL CONSTRUCTION |
| AISI | AMERICAN IRON AND STEEL INSTITUTE |
| AITC | AMERICAN INSTITUTE OF TIMBER CONSTRUCTION |
| ALT | ALTERNAT(-E, -OR) |
| ALTD | ALTITUDE |
| ALUM | ALUMINUM |
| ALV | ALTITUDE VALVE |
| AMB | AMBIENT |
| ANC | ANCHOR |
| ANN | ANNUNCIATOR |
| ANSI | AMERICAN NATIONAL STANDARDS INSTITUTE |
| ANT | ANTENNA |
| AO | ANALOG OUTPUT |
| APA | THE ENGINEERED WOOD ASSOCIATION |
| APPROX | APPROXIMATE(-LY) |
| ARV | AIR RELEASE VALVE |
| AS | AMMETER SWITCH |
| ASB | ASBESTOS |
| ASCE | AMERICAN SOCIETY OF CIVIL ENGINEERS |
| ASD | ADJUSTABLE SPEED DRIVE (DC) |
| ASHRAE | AMERICAN SOCIETY OF HEATING, REFRIGERATING AND AIR-CONDITIONING ENGINEERS |
| ASME | AMERICAN SOCIETY OF MECHANICAL ENGINEERS |
| ASPH | ASPHALT |
| ASSY | ASSEMBLY |
| ASTM | AMERICAN SOCIETY FOR TESTING AND MATERIALS |
| AT | AMPERE TRIP |
| ATM | ATMOSPHERE (14.7 LB/IN2) |
| ATS | AUTOMATIC TRANSFER SWITCH |
| AUTO | AUTOMATIC |
| AUX | AUXILIARY |
| AVE | AVENUE |
| AVG | AVERAGE |
| AVV | AIR VACUUM VALVE |
| AWG | AMERICAN WIRE GAGE |
| AWS | AMERICAN WELDING SOCIETY |
| AWT | ADVANCED WATER TREATMENT |
| AWWA | AMERICAN WATER WORKS ASSOCIATION |
| B/W | BOTTOM OF WALL |
| BARM | BARMINUTOR |
| BATT | BATTERY |
| BB(S) | BEARING BAR(-S) |
| BC | BEGINNING OF HORIZONTAL CURVE, BARE COPPER |
| BCR | BEGIN CURB RETURN |
| BCV | BALL CHECK VALVE |
| BD | BOARD, BELT DRIVE |
| BDD | BACKDRAFT DAMPER |
| BF | BLIND FLANGE |
| BFV | BUTTERFLY VALVE |
| BFP | BELT FILTER PRESS, BACKFLOW PREVENTER |
| BHP | BRAKE HORSEPOWER |
| BITUM | BITUMINOUS |
| BKR | BREAKER |
| BL | BUILDING LINE |
| BLDG | BUILDING |
| BLK | BLOCK(-S) |
| BLKG | BLOCKING |
| BM | BEAM, BENCH MARK |
| BM-1 | BEAM MEMBER 1 |
| BN | BOUNDARY NAILING |
| BO | BLOWOFF |
| BOC | BACK OF CURB |
| BOD | BOTTOM OF DUCT |
| BOD 5 | BIOCHEMICAL OXYGEN DEMAND (5 DAY) |
| BOE | BOTTOM OF EQUIPMENT |
| BOP | BOTTOM OF PIPE |
| BOT | BOTTOM |
| BP | BASE PLATE |
| BRG | BEARING |
| BS | BLACK STEEL, BOTH SIDES |
| BSMT | BASEMENT |
| BTU | BRITISH THERMAL UNIT |
| BTWN | BETWEEN |
| BV | BALL VALVE |
| BVC | BEGINNING OF VERTICAL CURVE |
| C | CURVE, CONDUCTOR, CONTACT |
| C/C | CENTER-TO-CENTER |
| C/S | CONSTANT SPEED |
| CAB | CABINET |
| CALC(S) | CALCULATION(S) |
| CAT | CATEGORY |
| CATV | CABLE TV |
| CAV | COMBINATION AIR VALVE |
| CB | CATCH BASIN, CIRCUIT BREAKER |
| CC | CUBIC CENTIMETER(-S) |
| CCT | CHLORINE CONTACT TANK |
| CCTV | CLOSED-CIRCUIT TELEVISION |
| CD | CONTROL DAMPER |
| CEM | CEMENT |
| CEN | CENTRAL |
| CENT | CENTRIFUGAL |
| CER | CEILING EXHAUST RETURN |
| CFH | CUBIC FEET PER HOUR |
| CFM | CUBIC FEET PER MINUTE |
| CFS | CUBIC FEET PER SECOND |
| CH | CHAMBER |
| CHAN | CHANNEL |
| CHEM | CHEMI(-CAL, -STRY) |
| CHK | CHECK |
| CHKD | CHECKERED |
| CI | CAST IRON |
| CID1 | CLASSIFICATION I, DIVISION 1 |
| CID2 | CLASSIFICATION I, DIVISION 2 |
| CIP | CAST IRON PIPE, CAST IN PLACE, CLEAN IN PLACE |
| CIRC | CIRCULA(-R, -TION) |
| CIRCUM | CIRCUMFERENCE |
| CISP | CAST IRON SOIL PIPE |
| CJ | CONSTRUCTION JOINT |
| CJP | COMPLETE JOINT PENETRATION |
| CKT | CIRCUIT |
| CL2 | CHLORINE |
| CLASS | CLASSIFICATION |
| CLG | CEILING |
| CLOS | CLOSET |
| CLR | CLEAR(-ANCE) |
| CLSM | CONTROLLED LOW STRENGTH MATERIAL |
| CM | CENTIMETERS |
| CMC | CEMENT MORTAR COATED |
| CML | CEMENT MORTAR LINED |
| CML&C | CEMENT MORTAR LINED AND COATED |
| CMP | CORRUGATED METAL PIPE |
| CMU | CONCRETE MASONRY UNIT |
| CNJ | CONTROL JOINT |
| CNTR | CENTER |
| CNTRSK | COUNTERSUNK |
| CO | CLEANOUT, CONDUIT ONLY |
| CO2 | CARBON DIOXIDE |
| COAX | COAXIAL |
| COD | CHEMICAL OXYGEN DEMAND |
| COL | COLUMN |
| COM | COMMON |
| COMM | COMMUNICATION |
| COMP | COMPRESSOR |
| CONC | CONCRETE |
| COND | CONDENSATE, CONDUIT |
| CONN | CONNECT (-ED, -S, -ION) |
| CONST | CONSTRUCTION |
| CONT | CONTINU(-ED, -OUS, -ATION) |
| COORD | COORDINATE |
| COP | COEFFICIENT OF PERFORMANCE |
| COR | CORNER |
| CORP | CORPORATION |
| CORR | CORRUGATED |
| COTG | CLEANOUT TO GRADE |
| CP | CONTROL POINT, CATHODIC PROTECTION |
| CPLG | COUPLING |
| CPT | CONTROL POWER TRANSFORMER |
| CPVC | CHLORINATED POLYVINYL CHLORIDE |
| CR | CONTROL RELAY, CRUSHED ROCK |
| CSD | CEILING SUPPLY DIFFUSER |
| CT | COURT, CURRENT TRANSFORMER, COOLING TOWER |
| CTRL | CONTROL |
| CTS | CATHODIC TEST STATION |
| CU FT | CUBIC FOOT, CUBIC FEET |
| CU IN | CUBIC INCH(-ES) |
| CU M | CUBIC METER(-S) |
| CU YD | CUBIC YARD(-S) |
| CUR | CURRENT |
| CV | VALVE FLOW COEFFICIENT, CHECK VALVE |
| CWT | ONE HUNDRED POUNDS |
| DB | DRY BULB |
| DBC | DUCKBILL CHECK VALVE |
| DBL | DOUBLE |
| DC | DIRECT CURRENT |
| DCA | DOUBLE CHECK (VALVE) ASSEMBLY |
| DCS | DISTRIBUTED CONTROL SYSTEM |
| DCV | DOUBLE DISC CHECK VALVE |
| DEFL | DEFLECTION |
| DEG | DEGREE(-S) |
| DEG C | DEGREES CELSIUS |
| DEG F | DEGREES FARENHEIT |
| DEMO | DEMOLISH |
| DEPT | DEPARTMENT |
| DH | HEAD LOSS (IN FEET), DOWNHOLE |
| DI | DUCTILE IRON, DROP INLET, DISCRETE INPUT |
| DIA | DIAMETER |
| DIAG | DIAGONAL, DIAGRAM |
| DIAPH | DIAPHRAGM |
| DIM(-S) | DIMENSION(-S) |
| DIP | DUCTILE IRON PIPE |
| DIR | DIRECTION |
| DISC | DISCONNECT |
| DISCH | DISCHARGE |
| DISTR | DISTRIBUTION |
| DL | DEAD LOAD |
| DN | DOWN |
| DO | DISSOLVED OXYGEN, DISCRETE OUTPUT |
| DPDT | DOUBLE POLE, DOUBLE THROW |
| DPST | DOUBLE POLE, SINGLE THROW |
| DR | DOOR, DRAIN, DRYER |
| DRG | DOUBLE RUBBER GASKET JOINT |
| DS | DOWN SPOUT |
| DTL(-S) | DETAIL(-S) |
| DUP | DUPLEX |
| DV | DIAPHRAGM VALVE |
| DWG(-S) | DRAWING(-S) |
| E | EAST |
| EA | EACH, EXHAUST AIR |
| EC | END OF HORIZONTAL CURVE |
| ECC | ECCENTRIC |
| ECD | EPOXY COATED |
| ECR | END CURB RETURN |
| EER | ENERGY EFFICIENCY RATIO |
| EF | EACH FACE |
| EFFIC | EFFICIENCY |
| EFFL | EFFLUENT |
| EG | EXISTING GRADE |
| EGL | ENERGY GRADE LINE |
| EL | ELEVATION, EPOXY LINED |
| EL&C | EPOXY LINED AND COATED |
| ELEM | ELEMENTARY |
| ELL | ELBOW |
| EMBED | EMBEDMENT |
| EMERG | EMERGENCY |
| EN | EDGE NAILING |
| ENCL | ENCLOSURE |
| ENET | ETHERNET |
| ENGR | ENGINEER |
| ENTR | ENTRANCE |
| EP | EDGE OF PAVEMENT |
| EPA | ENVIRONMENTAL PROTECTION AGENCY |
| EQ | EQUAL (-LY, -IZATION) |
| EQPM | EQUIPMENT |
| ES | EACH SIDE |
| ES/EW | EMERGENCY SHOWER/EYE WASH |
| ESP | EXTERNAL STATIC PRESSURE |
| EST | ESTIMATE(-D) |
| E-STOP | EMERGENCY STOP |
| ETM | ELAPSED TIME METER |
| ETS | ELECTROLYSIS TEST STATION |
| EUSERC | ELECTRIC UTILITY SERVICE EQUIPMENT REQUIREMENTS COMMITTEE |
| EVC | END OF VERTICAL CURVE |
| EW | EACH WAY |
| EWT | ENTERING WATER TEMPERATURE |
| EXC | EXCAVATE |
| EXH | EXHAUST |
| EXIST | EXISTING |
| EXP | EXPANSION |
| EXT | EXTERNAL, EXTERIOR |
| FA | FIRE ALARM |
| FAB | FABRICATE(-D) |
| FAC | FACTORY |
| FACIL | FACILIT(-Y, -IES) |
| FAI | FRESH AIR INTAKE |
| FB | FLAT BAR |
| FC | FLEXIBLE COUPLING |
| FCA | FLANGE COUPLING ADAPTER |
| FCO | FLOOR CLEANOUT |
| FD | FLOOR DRAIN, FIRE DAMPER |
| FDC | FIRE DEPARTMENT CONNECTION |
| FDR | FEEDER |
| FE | FIRE EXTINGUISHER |
| FF | FAR FACE, FINISHED FLOOR |
| FFE | FINISHED FLOOR ELEVATION |
| FG | FINISHED GRADE |
| FH | FIRE HYDRANT |
| FIG | FIGURE |
| FIN | FINISH(-ED) |
| FL | FLOW LINE |
| FLA | FULL LOAD AMPERES |
| FLASH | FLASHING |
| FLEX | FLEXIBLE |
| FLG | FLANGE(-D) |
| FLOC | FLOCCULATION |
| FLR | FLOOR |
| FM | FLOW METER |
| FN | FIELD NAILING |
| FNDN | FOUNDATION |
| FO | FIBER OPTIC |
| FOS | FACE OF STUD |
| FPS | FEET PER SECOND |
| FREQ | FREQUENCY |
| FRP | FIBERGLASS REINFORCED PLASTIC |
| FRT | FIRE-RETARDANT FLOOR |
| FS | FINISHED SURFACE, FAR SIDE |
| FSD | FIRE/SMOKE DAMPER |
| FT | FOOT, FEET |
| FTG | FOOTING |
| FU | FUSE |
| FURN | FURNITURE, FURNISHINGS |
| FURR | FURRING |
| FUT | FUTURE |
| FVNR | FULL VOLTAGE, NON REVERSING |
| FVR | FULL VOLTAGE, REVERSING |
| FWD | FORWARD |
| G | GRAMS, GROUND (ELECTRICAL) |
| GA | GAUGE |
| GAC | GRANULAR ACTIVATED CARBON |
| GAL | GALLON(-S) |
| GALV | GALVANIZED |
| GAS | GASOLINE |
| GB | GRADE BREAK |
| GC | GROOVED COUPLING |
| GDL | GROUND LEVEL |
| GFCI | GROUND-FAULT CIRCUIT INTERRUPTER |
| GI | GALVANIZED IRON |
| GL | GLASS |
| GLAZ | GLAZING |
| GLB | GLULAM BEAM |
| GLL | GLASS LINED |
| GLV | GLOBE VALVE |
| GND | GROUND |
| GPD | GALLONS PER DAY |
| GPH | GALLONS PER HOUR |
| GPM | GALLONS PER MINUTE |
| GPR | GROUND PENETRATING RADAR |
| GR | GRATE |
| GRL | GUARDRAIL |
| GRS | GALVANIZED RIGID STEEL |
| GS | GALVANIZED STEEL |
| GV | GATE VALVE |
| GYP (BD) | GYPSUM (BOARD) |
| H | HIGH, HEIGHT |
| H2O2 | HYDROGEN PEROXIDE |
| H2S | HYDROGEN SULFIDE |
| H2SO4 | SULFURIC ACID |
| HB | HOSE BIBB |
| HD | HEAVY DUTY, HEAT DETECTOR |
| HDG | HOT DIP GALVANIZE(-D) |
| HDPE | HIGH DENSITY POLYETHYLENE |
| HDWD | HARDWOOD |
| HGL | HYDRAULIC GRADE LINE |
| HGR | HANGER |
| HH | HANDHOLE |
| HI | HYDRAULIC INSTITUTE |
| HM | HOLLOW METAL |
| HMI | HUMAN MACHINE INTERFACE |
| HOA | HAND-OFF-AUTOMATIC |
| HOR | HAND-OFF-REMOTE |
| HORZ | HORIZONTAL |
| HOV | HYDRAULICALLY OPERATED VALVE |
| HP | HORSEPOWER |
| H-P | HINGE POINT |
| HPT | HIGH POINT |
| HR(S) | HOUR(-S) |
| HRL | HANDRAIL |
| HSPF | HEATING SEASONAL PROFICIENCY FACTOR |
| HSS | HOLLOW STRUCTURAL SECTION |
| HST | HOIST |
| HT | HEIGHT |
| HTG | HEATING |
| HTR | HEATER |
| HVAC | HEATING, VENTILATING, AND AIR CONDITIONING |
| HVY | HEAVY |
| HWL | HIGH WATER LEVEL |
| HWY | HIGHWAY |
| HYD | HYDRAULIC |
| HZ | HERTZ (CYCLES PER SECOND) |
| I&C | INSTRUMENTATION AND CONTROL |
| I/O | INPUT/OUTPUT |
| IBC | INTERNATIONAL BUILDING CODE |
| ICC | INTERNATIONAL CODE COUNCIL |
| ID | INSIDE DIAMETER |
| IE | INVERT ELEVATION |
| IEEE | INSTITUTE OF ELECTRICAL AND ELECTRONICS ENGINEERS |
| IEER | INTEGRATED ENERGY EFFICIENCY RATIO |
| IF | INSIDE FACE |
| IL | INDICATING LIGHT |
| IN | INCH(-ES) |
| INFL | INFLUENT |
| INST | INSTANTANEOUS |
| INSTR | INSTRUMENT(-ATION) |
| INSUL | INSULATION |
| INT | INTERIOR, INTERNAL |
| INV | INVERT |
| IP | INTERNET PROTOCOL |
| IPS | INTERNATIONAL PIPE STANDARD, INCHES PER SECOND, IRON PIPE SIZE |
| IR | INFRARED |
| IRRG | IRRIGATION |
| IS | INTRINSICALLY SAFE |
| ISA | INTERNATIONAL SOCIETY OF AUTOMATION |
| ISO | ISOLAT(-E, -ION), ISOMETRIC |
| ISR | INTRINSICALLY SAFE RELAY |
| IX | ION EXCHANGE |
| JB | JUNCTION BOX |
| JST | JOIST |
| JT | JOINT |
| KA | KILOAMPERE(-S) |
| KCMIL | THOUSANDS OF CIRCULAR MILS |
| KG | KILOGRAM(-S) |
| KGV | KNIFE GATE VALVE |
| KHZ | KILOHERTZ |
| KIP | ONE THOUSAND POUNDS |
| KM | KILOMETER(-S) |
| KSI | KIPS PER SQUARE INCH |
| KV | KILOVOLT(-S) |
| KVA | KILOVOLT-AMPERE(-S) |
| KVAR | KILOVOLT-AMPERE(-S) REACTIVE |
| KVARH | KILOVOLT-AMPERE REACTIVE HOUR(-S) |
| KW | KILOWATT(-S) |
| KWH | KILOWATT HOUR(-S) |
| L | LITER(-S), LENGTH, LINE |
| L/D | LITERS PER DAY |
| LA | LIGHTNING ARRESTER |
| LAB | LABORATORY |
| LAM | LAMINATE |
| LAN | LOCAL AREA NETWORK |
| LAT | LATERAL |
| LAV | LAVATORY |
| LB(-S) | POUND(-S) |
| LB(-S)/SF | POUND(-S) PER SQUARE FOOT |
| LCP | LOCAL CONTROL PANEL |
| LCS | LOCAL CONTROL STATION |
| LD | DEVELOPMENT LENGTH |
| LDG | LANDING |
| LE | LIFTING EYE |
| LEED | LEADERSHIP IN ENERGY AND ENVIRONMENTAL DESIGN |
| LEL | LOWER EXPLOSIVE LIMIT |
| LF | LINEAR FEET |
| LG | LONG |
| LH | LEFT HAND |
| LIP | LIP OF GUTTER |
| LIQ | LIQUID |
| LL | LIVE LOAD |
| LLBB | LONG LEG BACK-TO-BACK |
| LLH | LONG LEG HORIZONTAL |
| LLV | LONG LEG VERTICAL |
| LO | LOW OR LUBRICATION |
| LOC | LOCATION |
| LONGIT | LONGITUDINAL |
| LOR | LOCAL-OFF-REMOTE |
| LOTO | LOCK-OUT, TAG-OUT |
| LP | LOW POINT, LIGHTING PANELBOARD |
| LPG | LIQUIFIED PETROLEUM GAS (PROPANE OR BUTANE AS NOTED) |
| LR | LONG RADIUS |
| L-R | LOCAL-REMOTE |
| LS | LIMIT SWITCH |
| LT | LEFT, LIGHT, LEFT TURN |
| LTG | LIGHTING |
| LV | LOW VOLTAGE |
| LW | LIGHT WEIGHT |
| LWL | LOW WATER LEVEL |
| LWT | LEAVING WATER TEMPERATURE |
| M | METER(-S) |
| mA | MILLIAMPERE(-S) |
| MACH | MACHINE |
| MATL | MATERIAL |
| MAX | MAXIMUM |
| MB | MACHINE BOLT |
| MBH | BTU PER HOUR (THOUSANDS) |
| MBR | MEMBRANE BIOREACTOR |
| MC | MOISTURE CONTENT, MISCELLANEOUS CHANNEL |
| MCA | MINIMUM CIRCUIT AMPACITY |
| MCB | MAIN CIRCUIT BREAKER |
| MCC | MOTOR CONTROL CENTER |
| MCP | MOTOR CIRCUIT PROTECTOR |
| MF | MICROFILTRATION |
| MFR | MANUFACTURER |
| MFRD | MANUFACTURED |
| MG | MILLIGRAM(-S), MILLION GALLON(-S) |
| MG/L | MILLIGRAMS PER LITER |
| MGD | MILLION GALLONS PER DAY |
| MH | MANHOLE |
| MHZ | MEGAHERTZ |
| MI | MILES |
| MIL(-S) | ONE-THOUSANDTH OF AN INCH |
| MIN | MINIMUM, MINUTE(-S) |
| MISC | MISCELLANEOUS |
| MJ | MECHANICAL JOINT |
| ML | MILLILITER(-S) |
| MLO | MAIN LUGS ONLY |
| MM | MILLIMETER(-S), MULTIMODE (FIBER) |
| MMBH | BTU PER HOUR (MILLIONS) |
| MOCP | MAXIMUM OVERCURRENT PROTECTION |
| MOD(-S) | MODIF(-Y, -ICATIONS) |
| MON | MONUMENT |
| MOV | MOTOR OPERATED VALVE |
| MPH | MILES PER HOUR |
| MR | MOISTURE-RESISTANT |
| MSE | MECHANICALLY STABILIZED EARTH |
| MT(-D, -G) | MOUNT(-ED, -ING) |
| MTL | METAL |
| MTR | MOTOR |
| MTS | MANUAL TRANSFER SWITCH |
| MUL | MULLION |
| MV | MEDIUM VOLTAGE |
| N | NORTH, NEUTRAL (ELECTRICAL) |
| N/A | NOT APPLICABLE |
| NAD | NORTH AMERICAN DATUM |
| NAOCL | SODIUM HYPOCHLORITE |
| NAOH | SODIUM HYDROXIDE |
| NAVD | NORTH AMERICAN VERTICAL DATUM |
| NC | NORMALLY CLOSED |
| NDT | NON-DESTRUCTIVE TEST(ING) |
| NE | NORTHEAST |
| NEC | NATIONAL ELECTRICAL CODE (NFPA 70) |
| NECA | NATIONAL ELECTRICAL CONTRACTORS ASSOCIATION |
| NEMA | NATIONAL ELECTRICAL MANUFACTURER'S ASSOCIATION |
| NETA | INTERNATIONAL ELECTRICAL TESTING ASSOCIATION |
| NF | NEAR FACE, NANOFILTRATION |
| NFC | NOT FOR CONSTRUCTION |
| NFPA | NATIONAL FIRE PROTECTION ASSOCIATION |
| NG | NATURAL GAS |
| NH3 | AMMONIA |
| NIC | NOT IN CONTRACT |
| NO | NORMALLY OPEN, NUMBER |
| NOM | NOMINAL |
| NORM | NORMAL |
| NPT | NATIONAL PIPE THREAD |
| NRS | NON-RISING STEM GATE VALVE |
| NS | NEAR SIDE |
| NSG | NON-SHRINK GROUT |
| NT | NORMALLY THROTTLED |
| NTS | NOT TO SCALE |
| NW | NORTHWEST |
| NWL | NORMAL WATER LEVEL |
| O/C | OPEN/CLOSE |
| O3 | OZONE |
| OA | OVERALL |
| OBD | OPPOSED BLADE DAMPER |
| OC | ON CENTER |
| OD | OUTSIDE DIAMETER |
| ODP | OPEN DRIP PROOF |
| OF | OVERFLOW, OUTSIDE FACE |
| OFCI | OWNER FURNISHED, CONTRACTOR INSTALLED |
| OFS | OUTSIDE FACE OF STUD |
| OG | ORIGINAL GROUND |
| OH | OPPOSITE HAND, OVERHEAD |
| OIT | OPERATOR INTERFACE TERMINAL |
| OL | THERMAL OVERLOAD RELAY |
| OPNG(-S) | OPENING(-S) |
| OPP | OPPOSITE |
| ORIG | ORIGINAL |
| OS&Y | OUTSIDE SCREW AND YOKE (RISING STEM GATE VALVE) |
| OSA | OUTSIDE AIR |
| OSC | OPEN/STOP/CLOSE |
| OSHA | OCCUPATIONAL SAFETY AND HEALTH ADMINISTRATION |
| OT | OVER TEMPERATURE |
| OZ | OUNCE(-S) |
| P | PNEUMATIC, PIPE, POLE |
| P/L | PROPERTY LINE |
| PA | PUBLIC ADDRESS |
| PACP | PERFORATED ASBESTOS CEMENT PIPE |
| PAF | POWDER/POWER ACTUATED FASTENER |
| PB | PULLBOX, PUSHBUTTON |
| PC(-S) | PIECE(-S), PHOTOCELL, POINT OF CURVE (BEGIN CURVE), PROGRESSIVE CAVITY |
| PCC | POINT OF COMPOUND CURVE, POINT OF COMMON COUPLING |
| PCCP | PRESTRESSED CONCRETE CYLINDER PIPE |
| PCF | POUNDS PER CUBIC FOOT |
| PCO | PRESSURE CLEANOUT |
| PCOTG | PRESSURIZED CLEANOUT TO GRADE |
| PD | PRESSURE DROP, POSITIVE DISPLACEMENT |
| PE | PHOTOELECTRIC, PLAIN END, POLYETHYLENE |
| PEMB | PRE-ENGINEERED METAL BUILDING |
| PEN | PENETRAT(-E, -ION) |
| PER | PERIODIC |
| PERC | PERCOLAT(-E, -ION) |
| PERF | PERFORAT(-E, -ED, -ES, -ATION) |
| PF | POWER FACTOR, PROFILE |
| PFAS | PER- AND POLYFLUOROALKYL SUBSTANCES |
| PFOA | PERFLUOROOCTANOIC ACID |
| PFOS | PERFLUOROOCTANESULFONATE |
| PFR | POWER FACTOR RELAY |
| PH | PIPE HANGER, PHASE |
| pH | MEASURE OF ACIDITY OR ALKALINITY |
| PHMS | PAN HEAD MACHINE SCREW |
| PHSMS | PAN HEAD SHEET METAL SCREW |
| PI | POINT OF INTERSECTION, PRESSURE INDICATOR (GAUGE) |
| PID | PROPORTIONAL-INTEGRAL-DERIVATIVE |
| PIT | PRESSURE INDICATING TRANSMITTER |
| PIV | POST INDICATOR VALVE |
| PLAS | PLASTER |
| PLC | PROGRAMMABLE LOGIC CONTROLLER |
| PLF | POUND PER LINEAL FOOT |
| PM | PROJECT MANAGER, POWER MONITOR |
| PNL | PANEL |
| PNLBD | PANELBOARD |
| PNV | PINCH VALVE |
| POE | POWER OVER ETHERNET |
| POT | POTABLE |
| PP | PARTIAL PENETRATION, POWER POLE, PAGES |
| PPB | PARTS PER BILLION |
| PPE | PERSONAL PROTECTIVE EQUIPMENT |
| PPM | PARTS PER MILLION |
| PR | PAIR |
| PRE-ENG | PRE-ENGINEERED |
| PRESS | PRESSURE |
| PRI | PRIMARY |
| PROJ | PROJECT(-ION) |
| PROP | PROPERTY, PROPOSED, PROPELLER |
| PROT | PROTECT(-OR) |
| PRS | PRESSURE SNUBBER |
| PRV | PRESSURE RELIEF VALVE, PRESSURE REDUCING VALVE |
| PS | PIPE SUPPORT, POWER SUPPLY, PRESSURE SWITCH |
| PSF | POUNDS PER SQUARE FOOT |
| PSI | POUNDS PER SQUARE INCH |
| PSIA | POUNDS PER SQUARE INCH ABSOLUTE (PRESSURE ABOVE VACUUM) |
| PSIG | POUNDS PER SQUARE INCH GAUGE (PRESSURE ABOVE ATMOSPHERE) |
| PSL | PIPE SLEEVE |
| PSTA | PUMP STATION |
| PSV | PRESSURE SUSTAINING VALVE |
| PT(-S) | POINT OF TANGENT (END CURVE), PRESSURE-TREATED, POTENTIAL TRANSFORMER, POINT(-S), PRESSURE TRANSMITTER |
| PU | POLYURETHANE |
| PV | PLUG VALVE |
| PVC | POLYVINYL CHLORIDE, POINT OF VERTICAL CURVE |
| PVI | POINT OF VERTICAL INTERSECTION |
| PVMT | PAVEMENT |
| PVT | POINT OF VERTICAL TANGENCY |
| PW | POTABLE WATER |
| PWR | POWER |
| PWWF | PEAK WET WEATHER FLOW |
| Q | FLOW OR DISCHARGE |
| R, RAD | RADIUS |
| R/W | RIGHT OF WAY |
| RA | RETURN AIR |
| RAS | RETURN ACTIVATED SLUDGE |
| RC | REINFORCED CONCRETE |
| RCCP | REINFORCED CONCRETE CYLINDER PIPE |
| RCP | REINFORCED CONCRETE PIPE |
| RCPT | RECEPTACLE |
| RCT | REPEAT CYCLE TIMER |
| RD | ROAD |
| REC | RECEIVING |
| RECIRC | RECIRCULAT(-E, -ION) |
| RECT | RECTANG(-LE, -ULAR) |
| RED | REDUCE(-R) |
| REF | REFERENCE |
| REFR | REFRIGERATOR |
| REG | REGULAT(-E, -OR, -ION, -ING) |
| REINF | REINFORC(-E, -ED, -ING, -EMENT) |
| REL | RELATIVE |
| REQD | REQUIRED |
| REQT | REQUIREMENT |
| RESIL | RESILIENT |
| RESV | RESERVOIR |
| REV | REVISION |
| RH | RIGHT HAND |
| RIO | REMOTE INPUT/OUTPUT |
| RM | ROOM |
| RMT | REMOTE |
| RND | ROUND |
| RO | REVERSE OSMOSIS |
| RPM | REVOLUTIONS PER MINUTE |
| RPP | REDUCED PRESSURE PRINCIPLE |
| RPS | REVOLUTIONS PER SECOND |
| RR | RAILROAD |
| RST | RESET |
| RT | RIGHT TURN, RESET TIMER |
| RTE | ROUTE |
| RTN | RETURN |
| RTU | ROOF TOP UNIT, REMOTE TELEMETRY UNIT |
| RVSS | REDUCED VOLTAGE, SOLID STATE |
| S | SEWER, SOUTH |
| S/S | START/STOP |
| S/W | SIDEWALK |
| SA | SUPPLY AIR |
| SAN | SANITARY |
| SARV | SEWAGE AIR RELEASE VALVE |
| SAVV | SEWAGE AIR VACUUM VALVE |
| SCADA | SUPERVISORY CONTROL AND DATA ACQUISITION |
| SCAV | SEWAGE COMBINATION AIR VALVE |
| SCFM | STANDARD CUBIC FEET PER MINUTE |
| SCH | SCHEDULE |
| SCR | SILICON CONTROLLED RECTIFIER |
| SCV | SILENT CHECK VALVE |
| SD | STORM DRAIN, SMOKE DETECTOR |
| SDMH | STORM DRAIN MANHOLE |
| SE | SOUTHEAST |
| SEC | SECONDARY, SECOND(-S) |
| SECT | SECTION |
| SED | SEDIMENTATION |
| SEER | SEASONAL ENERGY EFFICIENCY RATIO |
| SER | SERVICE ENTRANCE RATED |
| SGNL | SIGNAL |
| SH | SHOWER |
| (SH) | SHIELDED |
| SHT | SHEET |
| SI | SIDE INLET |
| SIM | SIMILAR |
| SK | SINK |
| SL | SLUDGE |
| SLBB | SHORT LEGS BACK-TO-BACK |
| SLH | SHORT LEG HORIZONTAL |
| SLV | SHORT LEG VERTICAL |
| SM | SINGLEMODE (FIBER) |
| SMACNA | SHEET METAL & AIR CONDITIONING CONTRACTORS' NATIONAL ASSOCIATION |
| SMS | SHEET METAL SCREW |
| SO2 | SULFUR DIOXIDE |
| SP | STATIC PRESSURE, SET POINT |
| SP GR | SPECIFIC GRAVITY |
| SPC(-S, -D) | SPACE(-S, -D) |
| SPD | SURGE PROTECTIVE DEVICE |
| SPDT | SINGLE POLE, DOUBLE THROW |
| SPEC(-S) | SPECIFICATION(-S) |
| SQ | SQUARE |
| SRG | SINGLE RUBBER GASKET JOINT |
| SS | STAINLESS STEEL, SANITARY SEWER, SOLID STATE |
| SSD | SATURATED SURFACE DRY |
| ST | STREET |
| STA | STATION |
| STAG | STAGGER |
| STB | SHORTING TERMINAL BLOCK |
| STD(-S) | STANDARD(-S) |
| STIFF | STIFFEN(-ER) |
| STL | STEEL |
| STM | STEAM |
| STOR | STORAGE |
| STP | SHIELDED TWISTED PAIR |
| SUB | SUBNATANT |
| SUBM | SUBMISSION, SUBMIT |
| SUP | SUPERNATANT |
| SUPP | SUPPORT(-S) |
| SURF | SURFACE |
| SUSP | SUSPEND(-ED) |
| SW | SOUTHWEST, SWITCH |
| SWBD | SWITCHBOARD |
| SWGR | SWITCHGEAR |
| SYM | SYMMETRICAL |
| SYNC | SYNCHRONIZING |
| SYS | SYSTEM |
| T | TIME(-R) |
| T&B | TOP AND BOTTOM |
| T&G | TONGUE AND GROOVE |
| T/C | TOP OF CONCRETE |
| T/P | TOP OF PAVEMENT |
| T/S | TOP OF STEEL |
| T/W | TOP OF WALL |
| T-_-P | TYPE _____ PIPE |
| T-_-S | TYPE _____ SUPPORT |
| TA | TRANSFER AIR |
| TAN | TANGENT(-IAL) |
| TB | THRUST BLOCK, TERMINAL BLOCK |
| TBM | TEMPORARY BENCHMARK, TUNNEL BORING MACHINE |
| TC | TRAY CABLE |
| TCP | TRANSMISSION CONTROL PROTOCOL |
| TDH | TOTAL DYNAMIC HEAD |
| TDS | TOTAL DISSOLVED SOLIDS |
| TEFC | TOTALLY ENCLOSED FAN COOLED |
| TEL | TELEPHONE |
| TEMP | TEMPERATURE, TEMPORARY |
| TMPTNK | TEMPERING TANK |
| TENV | TOTALLY ENCLOSED NON-VENTILATED |
| THK | THICK(-ENED, -ENER, -NESS) |
| THRU | THROUGH |
| TMV | THERMOSTATIC MIXING VALVE |
| TNK | TANK |
| TOD | TOTAL OXYGEN DEMAND |
| TOPO | TOPOGRAPHY |
| TOT | TOTAL, TOTALIZE(R) |
| TP | TEST PIT |
| TR | TREAD(-S) |
| T-R | THROUGH ROOF |
| TRTMT | TREATMENT |
| TS | STRUCTURAL TUBING |
| TSS | TOTAL SUSPENDED SOLIDS |
| TSTAT | THERMOSTAT |
| TURB | TURBIDITY |
| TYP | TYPICAL |
| U | URINAL |
| UBC | UNIFORM BUILDING CODE |
| UD | UNDERDRAIN |
| UF | ULTRAFILTRATION |
| UG | UNDERGROUND |
| UL | UNDERWRITERS LABORATORIES |
| UNKN | UNKNOWN |
| UON | UNLESS OTHERWISE NOTED |
| UPS | UNINTERRUPTIBLE POWER SUPPLY |
| USGBC | UNITED STATES GREEN BUILDING COUNCIL |
| UT | ULTRASONIC TESTING |
| UTP | UNSHIELDED TWISTED PAIR |
| UV | ULTRAVIOLET |
| V | VOLTS |
| V/S | VARIABLE SPEED |
| VA | VOLT-AMPERES |
| VAC | VACUUM |
| VAR | VARIES, VARIABLE, VOLT-AMPERES REACTIVE |
| VAT | VINYL ASBESTOS TILE |
| VC | VERTICAL CURVE |
| VCP | VITRIFIED CLAY PIPE, VENDOR CONTROL PANEL |
| VD | VOLUME DAMPER |
| VEL | VELOCITY |
| VERT | VERTICAL |
| VERTS | VERTICAL BARS |
| VFD | VARIABLE FREQUENCY DRIVE (AC) |
| VFI | VACUUM FAULT INTERRUPTER |
| VIF | VERIFY IN FIELD |
| VOL | VOLUME |
| VPI | VERTICAL POINT OF INTERS

Plot Date: 1/17/2025 1:13 PM
User: AEKJM MHAJAN
pw:\\kjce-pw.bentley.com:kjce-pw\Documents\Clients\Anacortes, Port of WA\Projects\Curtis Wharf Pump Out Facility Final Design_1996021.19\10-Design\10.06-Drawings\General\1996021.19-G-003.DWG

## NOTES

GENERAL

1. THIS PROJECT IS WITHIN CITY OF ANACORTES, WASHINGTON LIMITS. OBTAIN PERMITS NECESSARY TO COMPLETE FEATURES WITHIN EASEMENTS, DEDICATIONS AND PUBLIC RIGHT-OF-WAY.
2. ALL WORK SHALL BE PERFORMED IN ACCORDANCE WITH PROJECT SPECIFICATIONS.
3. A PRE-EXISTING SITE CONDITION VIDEO SHALL BE PROVIDED BY THE CONTRACTOR AND SHALL SHOW EXISTING CONDITIONS OF ALL CONCRETE, ASPHALT, LANDSCAPED AREAS, BUILDING EXTERIOR, ETC. SURROUNDING THE CONSTRUCTION AREAS. VIDEO SHALL BE SUBMITTED TO THE OWNER PRIOR TO BREAKING GROUND. THE CONTRACTOR SHALL TAKE ALL PRECAUTIONARY MEASURES NECESSARY TO PROTECT EXISTING IMPROVEMENTS WHICH ARE TO REMAIN IN PLACE FROM DAMAGE. ALL IMPROVEMENTS DAMAGED BY THE CONTRACTOR'S OPERATIONS SHALL BE EXPEDITIOUSLY REPAIRED OR RECONSTRUCTED AT THE CONTRACTOR'S EXPENSE WITHOUT ADDITIONAL COMPENSATION.

UTILITIES

1. LOCATIONS OF UNDERGROUND UTILITIES SHOWN ON THE DRAWINGS WERE OBTAINED FROM AVAILABLE RECORDS AND ARE SHOWN IN THEIR APPROXIMATE LOCATION. THERE IS NO GUARANTEE THAT ALL EXISTING PIPELINES AND OBSTRUCTIONS ARE SHOWN OR THAT LOCATIONS INDICATED ARE ACCURATE. PRIOR TO THE START OF CONSTRUCTION, THE CONTRACTOR SHALL POTHOLE TO DETERMINE ACTUAL LOCATION AND ELEVATION OF ALL EXISTING UTILITIES IN AND AROUND THE AREAS OF NEW CONSTRUCTION.
2. THE CONTRACTOR SHALL TAKE ALL PRECAUTIONARY MEASURES NECESSARY TO PROTECT ALL REMAINING EXISTING UTILITIES WHETHER SHOWN OR NOT SHOWN.
3. PRIOR TO ANY CONNECTION TO AN EXISTING UTILITY, THE CONTRACTOR SHALL COORDINATE WITH THE UTILITY OWNER.
4. PRIOR TO ANY EXCAVATION IN THE VICINITY OF ANY EXISTING UNDERGROUND FACILITIES, INCLUDING ALL WATER, SEWER, STORM DRAIN, GAS, PETROLEUM PRODUCTS, OR OTHER PIPELINES; ALL BURIED ELECTRIC POWER, COMMUNICATIONS, OR TELEVISION CABLES; ALL TRAFFIC SIGNAL AND STREET LIGHTING FACILITIES; AND ALL ROADWAY, STATE HIGHWAY, AND RAILROAD RIGHTS-OF-WAY, THE CONTRACTOR SHALL NOTIFY THE RESPECTIVE AUTHORITIES REPRESENTING THE OWNERS OR AGENCIES RESPONSIBLE FOR SUCH FACILITIES TO FACILITATE A TIMELY MANNER OF WORK SO THAT A REPRESENTATIVE OF SAID OWNERS OR AGENCIES CAN BE PRESENT DURING SUCH WORK IF THEY SO DESIRE. IN THE CASE OF THE UNDERGROUND UTILITY SERVICE ALERT CENTER, THIS NOTICE WILL GIVE THEM TIME TO MARK THE LOCATION OF THE UTILITIES. THE CONTRACTOR SHALL ALSO NOTIFY UNDERGROUND SERVICES ALERT (USA) AT (811) IN ACCORDANCE WITH THE SPECIFICATIONS TO FACILITATE A TIMELY MANNER OF WORK, PRIOR TO SUCH EXCAVATION.

## PROJECT DESCRIPTION

THIS PROJECT CONSISTS OF THE FOLLOWING:

1. INSTALLATION OF 360 LF OF HDPE SANITARY SEWER PIPING.

## CALLOUTS AND SHORTHAND SYMBOLS

- DIRECTION OF FLOW
- SHEET KEYNOTE
- CENTERLINE
- PLATE
- DIAMETER
- APPROXIMATELY
- ANGLE
- WATER/FLUID SURFACE

## REVISION SYMBOLS

CLOUDED AREA INDICATES CHANGED INFORMATION; NUMBER IN TRIANGLE INDICATES THE DRAWING VERSION AND MATCHES WITH REVISION INFORMATION IN THE REVISION BLOCK WITHIN THE DRAWING BORDER

## SYMBOLOGY

- NORTH ARROW
- MAJOR CONTOURS
- MINOR CONTOURS
- NEW
- EXISTING; SCREENED TEXT LABELS FOR SCREENED ELEMENTS IMPLY THE ELEMENT IS EXISTING
- FUTURE
- EXISTING LINEAR ELEMENTS TO BE REMOVED OR DEMOLISHED
- EXISTING NON-LINEAR ELEMENTS TO BE REMOVED OR DEMOLISHED
- CENTERLINE
- MATCHLINE
- BREAK LINE
- PARCEL BOUNDARY
- NATIVE EARTH (IN SECTION)
- EXISTING ASPHALT SURFACING
- EXISTING CONCRETE SURFACING
- EXISTING GRAVEL SURFACING
- SAND OR GROUT (IN PLAN AND SECTION)
- GRAVEL (IN PLAN AND SECTION)
- AGGREGATE BASE (IN PLAN AND SECTION)
- CONCRETE (IN PLAN AND SECTION)
- GRATING (IN PLAN)
- STEEL (IN SECTION)

## CROSS-REFERENCING SYMBOLS

FOUND ON DRAWING WHERE DETAIL, SECTION, OR ELEVATION IS CALLED OUT

FOUND ON DRAWING WHERE DETAIL, SECTION, OR ELEVATION IS DRAWN

DETAIL NUMBER — 1 / C-15 — SHEET ON WHICH DETAIL IS DRAWN, "-" IF ON SAME SHEET

DETAIL NUMBER — 1 / C-4 — DETAIL TITLE — SCALE: #/#" = 1'-0" — SHEET ON WHICH DETAIL IS CALLED OUT, "-" IF ON SAME SHEET

SECTION LETTER — A / A-13 — SHEET ON WHICH SECTION IS DRAWN, "-" IF ON SAME SHEET

SECTION LETTER — A / A-5 — SECTION TITLE — SCALE: #/#" = 1'-0" — SHEET ON WHICH SECTION IS CUT, "-" IF ON SAME SHEET

LETTERS USED WHEN MORE THAN ONE ELEVATION IS DRAWN WITHIN A SINGLE ROOM — ELEVATION NUMBER — D / 2 / A-9 / B / C — OR — 2 / A-9 — SHEET ON WHICH ELEVATION IS DRAWN, "-" IF ON SAME SHEET

ELEVATION NUMBER — 2 / A-3 — INTERIOR ELEVATION A — SCALE: #/#" = 1'-0" — SHEET ON WHICH ELEVATION IS CALLED OUT, "-" IF ON SAME SHEET

STANDARD DETAIL NUMBER — S-5605

STANDARD DETAIL NUMBER — C-5605 — STANDARD DETAIL TITLE — SUB-TITLE — SCALE: #/#" = 1'-0" — REV 00

NOTE
STANDARD DETAILS ARE LOCATED WITHIN THEIR RESPECTIVE DISCIPLINE, IMMEDIATELY FOLLOWING THE GENERAL ABBREVIATIONS, NOTES, AND LEGEND SHEETS.

30% SUBMITTAL

PRELIMINARY DESIGN PHASE

NOT FOR CONSTRUCTION

THIS DOCUMENT IS AN INTERIM DOCUMENT AND NOT SUITABLE FOR CONSTRUCTION. AS AN INTERIM DOCUMENT, IT MAY CONTAIN DATA THAT IS POTENTIALLY INACCURATE OR INCOMPLETE AND IS NOT TO BE RELIED UPON WITHOUT THE EXPRESS WRITTEN CONSENT OF THE PREPARER.

| NO | REVISION | DATE | BY |
|---|---|---|---|

SCALES
0 — 1"
0 — 25mm
IF THIS BAR IS NOT DIMENSION SHOWN, ADJUST SCALES ACCORDINGLY.

THIS PRELIMINARY DOCUMENT IS NOT FOR CONSTRUCTION. IT IS RELEASED UNDER THE AUTHORITY OF: SAMANTHA KARPA 21024598 JANUARY 2025

DESIGNED KJ
DRAWN KJ
CHECKED SNK

PORT OF ANACORTES
ANACORTES, WASHINGTON
CURTIS WHARF COMMERCIAL PUMP OUT FACILITY

Kennedy Jenks

GENERAL NOTES AND LEGEND

SCALE NTS
JOB NO 1996021.19
DATE JANUARY 2025
SHEET OF ---
G-003

Plot Date: 1/17/2025 1:13 PM
User: AEKJM MHAJAN
pw:\\kjce-pw.bentley.com:kjce-pw\Documents\Clients\Anacortes, Port of WA\Projects\Curtis Wharf Pump Out Facility Final Design_1996021.19\10-Design\10.06-Drawings\General\1996021.19-G-004.DWG

## EQUIPMENT DESIGNATIONS

NEW EQUIPMENT

EQUIPMENT PREFIX (1-4 CHARACTERS) SEE LIST THIS SHEET

##-EQPM-XXX

WHEN USED, FIRST TWO DIGITS REFER TO PROCESS AREA WHERE EQUIPMENT IS LOCATED (SEE LIST THIS SHEET)

SEQUENTIAL NUMBER OF EQUIPMENT IN PROCESS AREA

EXISTING EQUIPMENT

##-EQPM-XXX

FUTURE EQUIPMENT

##-EQPM-XXX

## EQUIPMENT PREFIXES

| | |
|---|---|
| ACU | HVAC AIR CONDITIONING UNIT (SELF-CONTAINED) |
| AF | HVAC AIR FILTER |
| AGT | AGITATOR |
| AHU | HVAC AIR HANDLER UNIT |
| ASD | ADJUSTABLE SPEED DRIVE (DC) |
| ATS | AUTOMATIC TRANSFER SWITCH |
| AV | AIR VALVE |
| BATT | BATTERY SYSTEM |
| BFP | BELT FILTER PRESS |
| BLWR | BLOWER |
| BOIL | HVAC BOILER |
| BP | BACKFLOW PREVENTER |
| CAP | CAPACITOR |
| CDU | HVAC CONDENSING UNIT |
| CH | HVAC CHILLER |
| CNV | CONVEYOR |
| COM | COMMINUTOR |
| COMP | AIR/GAS COMPRESSOR |
| COVR | COVER (FLOATING) |
| CPT | COMPACTOR (SCREENINGS, ETC.) |
| CPU | COMPUTER |
| CRAN | CRANE |
| CRCP | HVAC RECIRCULATING PUMP |
| CSTR | COMBINATION MOTOR STARTER |
| CTFG | CENTRIFUGE |
| DCSW | DISCONNECT SWITCH |
| DHMD | HVAC DEHUMIDIFIER |
| DIS | DISTRIBUTOR (ARM TYPE, EDUCTOR, EJECTOR, DIFFUSER, ETC.) |
| DMPR | HVAC CONTROL DAMPER |
| DP | DISTRIBUTION PANELBOARD |
| DR | DRYER |
| DU | DRIVE UNIT |
| ECU | HVAC EVAPORATIVE COOLING UNIT |
| EEW | EMERGENCY EYEWASH |
| ENG | ENGINE |
| EWS | EMERGENCY EYEWASH/SHOWER |
| EXF | HVAC FAN (EXHAUST) |
| FACP | FIRE ALARM CONTROL PANEL |
| FAN | HVAC FAN (RECIRCULATING) |
| FCG | FLOW CONTROL GATE (MODULATING SERVICE) |
| FCU | HVAC FAN COIL UNIT |
| FCV | FLOW CONTROL VALVE (MODULATING SERVICE) |
| FG | FLOW GATE (OPEN-CLOSE SERVICE) |
| FILT | FILTER |
| FLAR | FLARE |
| FLOC | FLOCCULATOR |
| FURN | HVAC FURNACE |
| FV | FLOW VALVE (OPEN-CLOSE SERVICE) |
| FVNR | FULL VOLTAGE, NON-REVERSING MOTOR STARTER |
| FVR | FULL VOLTAGE, REVERSING MOTOR STARTER |
| GATE | MANUALLY OPERATED GATE - SEE NOTES |
| GBT | GRAVITY BELT THICKENER |
| GEN | GENERATOR |
| GR | GRINDER |
| HC | HEATING COIL |
| HF | HARMONIC FILTER |
| HH | HANDHOLE |
| HPU | HEAT PUMP UNIT |
| HST | HOIST |
| HX | HEAT EXCHANGER |
| INJ | INJECTOR (INDUCTOR, EDUCTOR) |
| LCG | LEVEL CONTROL GATE (MODULATING SERVICE) |
| LCP | LOCAL CONTROL PANEL |
| LCS | LOCAL CONTROL STATION |
| LCV | LEVEL CONTROL VALVE (MODULATING SERVICE) |
| LG | LEVEL GATE (OPEN-CLOSE SERVICE) |
| LV | LEVEL VALVE (OPEN-CLOSE SERVICE) |
| LVR | HVAC LOUVER |
| LP | LIGHTING PANELBOARD |
| M | MOTOR |
| MAU | MAKE-UP AIR UNIT |
| MCC | MOTOR CONTROL CENTER |
| MH | MANHOLE |
| MME | MISCELLANEOUS MECHANICAL EQUIPMENT |
| MTS | MANUAL TRANSFER SWITCH |
| MUX | MULTIPLEXER |
| MX | MIXER |

## EQUIPMENT PREFIXES (CONT)

| | |
|---|---|
| OCU | ODOR CONTROL UNIT |
| OIT | OPERATOR INTERFACE TERMINAL |
| P | PUMP |
| PCV | PRESSURE CONTROL VALVE (MODULATING SERVICE) |
| POL | POLYMER DILUTION SYSTEM |
| PLC | PROGRAMMABLE LOGIC CONTROLLER |
| RH | ROOF HOOD |
| RIO | REMOTE INPUT/OUTPUT |
| RVAT | REDUCED VOLTAGE, AUTO TRANSFORMER MOTOR STARTER |
| RVPW | REDUCED VOLTAGE, PART WINDING MOTOR STARTER |
| RVSS | REDUCED VOLTAGE, SOLID STATE MOTOR STARTER |
| SC | SCREW COMPRESSOR |
| SCAL | WEIGHT SCALE |
| SCRN | SCREEN (BAR, ROTARY, ETC.) |
| SEP | SEPARATOR (SEDIMENTATION, TRAP, DRIP TRAP, CYCLONE, STRAINER, ETC.) |
| SLGR | SLUDGE GRINDER |
| SIL | SILENCER |
| SMP | SAMPLER |
| SEPT | SEPTAGE RECEIVING TANK |
| SOV | SOLENOID OPERATED VALVE |
| SUF | HVAC FAN (SUPPLY) |
| SV | SOLENOID VALVE OPERATOR |
| SWBD | SWITCHBOARD |
| SWGR | SWITCHGEAR |
| T | TANK |
| TCV | TEMPERATURE CONTROL VALVE (MODULATING SERVICE) |
| TP | TRAP PRIMER |
| TV | TEMPERATURE VALVE (OPEN-CLOSE SERVICE) |
| UH | HVAC UNIT HEATER |
| UPS | UNINTERRUPTIBLE POWER SUPPLY |
| UV | ULTRAVIOLET DISINFECTION UNIT |
| V* | MANUALLY OPERATED VALVE - SEE NOTES |
| VCP | VENDOR CONTROL PANEL |
| VFD | VARIABLE FREQUENCY DRIVE (AC) |
| WH | WATER HEATER |
| XFMR | TRANSFORMER |

NOTES

EQUIPMENT TAGS ARE TYPICALLY NOT SHOWN FOR MANUAL GATES AND VALVES.

## PIPING DESIGNATIONS

NEW PIPING

CENTERLINE ELEVATION (UNLESS OTHERWISE NOTED)

XXX.X

XXX.X

6"-RW

6"-RW

PROCESS CODE

NOMINAL PIPE DIAMETER

DOUBLE-CONTAINED PIPING

1/2" (2")-LAS

PROCESS PIPE DIAMETER

CONTAINMENT PIPE DIAMETER

PROCESS CODE

EXISTING PIPING

6"-RW 6"-RW

FUTURE PIPING

6"-RW 6"-RW

NOTE

ALL PIPING CALLOUTS ON PROCESS AND INSTRUMENTATION DIAGRAMS, AND EXISTING PIPING CALLOUTS ON CIVIL DRAWINGS WILL APPEAR AS NORMAL TEXT WITHOUT THE CAPSULES SHOWN IN THE EXAMPLES ABOVE.

## PROCESS CODES

| | |
|---|---|
| AA | AERATION AIR |
| AE | AERATION EFFLUENT |
| ALUM | LIQUID ALUM |
| AM | AMMONIA |
| AS | ANTISCALANT |
| ASI | ACTIVATED SILICA |
| AWA | AIRWASH AIR |
| BA | BUBBLER AIR |
| BW | BACKWASH SUPPLY |
| BWW | BACKWASH WASTE |
| CA | COMPRESSED AIR |
| CD | CLEARWELL DRAIN |
| CEN | CENTRATE |
| CHWR | HVAC CHILLED WATER RETURN |
| CHWS | HVAC CHILLED WATER SUPPLY |
| CIP | CLEAN-IN-PLACE WATER |
| CLG | CHLORINE - GAS |
| CLL | CHLORINE - LIQUID |
| CLS | CHLORINE SOLUTION |
| CLV | CHLORINE GAS UNDER VACUUM |
| CLVD | CHLORINE VENT & DETECTION |
| CN | CONCENTRATE |
| CND | CONDENSATE |
| COAG | ALUM/FERRIC CHLORIDE |
| CRD | CORROSION RESISTANT DRAIN |
| CRV | CORROSION RESISTANT VENT |
| CS | CIRCULATED SLUDGE |
| CTS | CALCIUM THIOSULFATE |
| CW | COLD WATER (DOMESTIC PLUMBING) |
| CWR | CHILLED WATER RETURN |
| CWS | CHILLED WATER SUPPLY |
| D | PLUMBING SANITARY DRAIN & VENT |
| DCNT | DECANT |
| DR | PROCESS DRAIN |
| DS | DIGESTED SLUDGE |
| DW | DEMINERALIZED WATER |
| EBS | ENGINEERED BIOSOLIDS |
| EEX | ENGINE EXHAUST |
| EWR | ENGINE COOLING WATER RETURN |
| EWS | ENGINE COOLING WATER SUPPLY |
| FA | FOUL AIR |
| FAW | FILTER AIR WASH |
| FC | FERRIC CHLORIDE |
| FE | FINAL EFFLUENT |
| FI | FILTER INFLUENT |
| FM | FORCE MAIN (SEWAGE) |
| FOG | FATS, OILS, AND GREASE |
| FOR | FUEL OIL RETURN |
| FOS | FUEL OIL SUPPLY |
| FS | FILTER SURFACE WASHWATER |
| FSW | FIRE SPRINKLER WATER |
| FTW | FILTER TO WASTE |
| FW | FILTERED WATER |
| FWS | FOOD WASTE SLURRY |
| GACE | GRANULAR ACTIVATED CARBON EFFLUENT |
| GACI | GRANULAR ACTIVATED CARBON INFLUENT |
| GR | GRIT |

## PROCESS CODES (CONT)

| | |
|---|---|
| H2O2 | HYDROGEN PEROXIDE |
| HCA | HYDROCHLORIC ACID |
| HFA | HYDROFLUOSILICIC ACID |
| HW | HOT WATER (DOMESTIC PLUMBING) |
| HWR | HEATING WATER RETURN |
| HWS | HEATING WATER SUPPLY |
| HYPO | SODIUM HYPOCHLORITE |
| IA | INSTRUMENT AIR |
| INJ | INJECTOR WATER |
| IRR | LANDSCAPING SPRINKLER SYSTEM |
| IW | INLET WATER |
| IXE | ION EXCHANGE EFFLUENT |
| IXI | ION EXCHANGE INFLUENT |
| LAS | LIQUID AMMONIUM SULFATE |
| LO | LUBE OIL |
| LOX | LIQUID OXYGEN |
| LPG | LIQUIFIED PETROLEUM GAS |
| LS | LIME SLURRY |
| MC | MEMBRANE CONCENTRATE SUPPLY |
| MCCR | MEMBRANE CONCENTRATE RETURN |
| MCP | MEMBRANE CLEANING PERMEATE SUPPLY |
| MCPR | MEMBRANE CLEANING PERMEATE RETURN |
| MCR | MEMBRANE CLEANING RETURN |
| MCS | MEMBRANE CLEANING SUPPLY |
| MCW | MEMBRANE CLEANING WASTE |
| METH | METHANOL |
| MF | MEMBRANE FEED WATER |
| MGOH | MAGNESIUM HYDROXIDE |
| ML | MIXED LIQUOR |
| MP | MEMBRANE PERMEATE |
| MUA | MURIATIC ACID |
| NG | NATURAL GAS |
| OCD | OZONE CONTACTOR DRAIN |
| OCS | OZONE CONTACTOR SAMPLE |
| OF | OVERFLOW |
| OG | OFF GAS |
| OXY | GASEOUS OXYGEN |
| OZ | OZONE |
| OW | OZONATED WATER |
| PA | PURGE AIR |
| PAC | POLYALUMINUM CHLORIDE |
| PD | PERFORATED DRAIN |
| PE | PRIMARY EFFLUENT |
| PHOS | PHOSPHATE |
| PM | PERMEATE |
| POLY | POLYMER |
| PP | POTASSIUM PERMANGANATE |
| PSL | PRIMARY SLUDGE |
| PW | POTABLE WATER |
| RA | RETURN AIR |
| RAS | RETURN ACTIVATED SLUDGE |
| REF | REFRIGERANT |
| REW | RECLAIMED WATER |
| RSL | RAW SLUDGE |
| RW | RAW WATER |
| SA | SAMPLE |
| SAD | SAMPLE DRAIN |
| SBL | SODIUM BISULFITE LIQUID |
| SBS | SODIUM BISULFITE SOLUTION |
| SCI | SCALE INHIBITOR |
| SK | SKIMMINGS/SCUM |
| SD | STORM DRAIN |
| SE | SECONDARY EFFLUENT |
| SG | SLUDGE GAS |
| SH | SODIUM HYDROXIDE/CAUSTIC SODA |
| SI | SODIUM SILICATE |
| SL | SLUDGE |
| SO2G | SULFUR DIOXIDE GAS |
| SO2S | SULFUR DIOXIDE SOLUTION |
| SO2V | SULFUR DIOXIDE GAS UNDER VACUUM |
| SOA | SULFURIC ACID |
| SP | SODIUM PERMANGANATE |
| SPD | SUMP PUMP DISCHARGE |
| SS | SANITARY SEWER |
| ST | STEAM (LOW PRESSURE <10 PSI) |
| SU | SLUDGE UNDERDRAIN |
| SUP | SUPERNATANT |
| SW | SETTLED WATER |
| TD | TANK DRAIN |
| TE | TERTIARY EFFLUENT |
| TPW | PLUMBING TEMPERED WATER |
| TS | THICKENED SUPERNATANT |
| TSL | THICKENED SLUDGE |
| TW | TREATED WATER |
| TWAS | THICKENED WAS |
| UW | UTILITY WATER |
| V | VENT |
| VTR | PLUMBING VENT TO ROOF |
| WAS | WASTE ACTIVATED SLUDGE |
| WCW | WASTE COOLING WATER |
| WLO | WASTE LUBE OIL |
| WW | WASTE WASHWATER |
| WWR | WASHWATER RETURN |

## PIPE AND FITTINGS

PIPE SCHEDULE

| LEGEND | SYSTEM | PIPE TYPE | |
|---|---|---|---|
| | | EXPOSED | BURIED |
| SS | SANITARY SEWER | HDPE | HDPE, DIPB (WHERE SHOWN) |

PIPE TYPE

| PIPE TYPE | PIPE MATERIAL | FIELD JOINTS | FITTINGS |
|---|---|---|---|
| DIPB | DUCTILE IRON BELL AND SPIGOT | BELL AND SPIGOT OR MECHANICAL GROOVE COUPLING | DUCTILE IRON |
| HDPE | HIGH DENSITY POLYETHYLENE | FUSION WELDED | HIGH DENSITY POLYETHYLENE |

30% SUBMITTAL

PRELIMINARY DESIGN PHASE

NOT FOR CONSTRUCTION

THIS DOCUMENT IS AN INTERIM DOCUMENT AND NOT SUITABLE FOR CONSTRUCTION. AS AN INTERIM DOCUMENT, IT MAY CONTAIN DATA THAT IS POTENTIALLY INACCURATE OR INCOMPLETE AND IS NOT TO BE RELIED UPON WITHOUT THE EXPRESS WRITTEN CONSENT OF THE PREPARER.

| NO | REVISION | DATE | BY |
|---|---|---|---|

SCALES

0 — 1"

0 — 25mm

IF THIS BAR IS NOT DIMENSION SHOWN, ADJUST SCALES ACCORDINGLY.

THIS PRELIMINARY DOCUMENT IS NOT FOR CONSTRUCTION. IT IS RELEASED UNDER THE AUTHORITY OF: SAMANTHA KARPA 21024598 JANUARY 2025

DESIGNED KJ

DRAWN KJ

CHECKED SNK

PORT OF ANACORTES

ANACORTES, WASHINGTON

CURTIS WHARF COMMERCIAL PUMP OUT FACILITY

Kennedy Jenks

GENERAL EQUIPMENT DESIGNATIONS AND PROCESS IDENTIFICATION CODES

SCALE NTS

JOB NO 1996021.19

DATE JANUARY 2025

SHEET OF ---

G-004

Exhibit # F
Page 4 of 16

## PIPING - SINGLE LINE

- NEW WORK (NOT SCREENED)
- EXISTING (SCREENED)
- FUTURE (LONG DASH, SHORT DASH)
- PROCESS - PRIMARY
- PROCESS - SECONDARY
- PROCESS - DRAIN
- PROCESS - HEAT TRACED
- PROCESS - INSULATED
- PROCESS - DOUBLE-CONTAINED
- OR — CONNECTED
- NOT CONNECTED

## TANKS AND VESSELS

- TANK WITH CONICAL ROOF
- TANK WITH DOMED ROOF
- TANK WITH FLAT ROOF
- OPEN TOP TANK
- TANK WITH FLOATING COVER
- PRESSURE VESSEL - VERTICAL
- PRESSURE VESSEL - HORIZONTAL
- HOPPER, VESSEL, OR BIN
- FILTER VESSEL
- STORAGE DRUM
- STORAGE TOTE

## VALVES AND GATES

- * FC = FAIL CLOSED; FO = FAIL OPEN; FL = FAIL LOCKED IN LAST
- GATE VALVE (NORMALLY OPEN, NORMALLY CLOSED)
- GLOBE VALVE (NORMALLY OPEN, NORMALLY CLOSED)
- PLUG VALVE (NORMALLY OPEN, NORMALLY CLOSED)
- CHECK VALVE
- ANGLED CHECK VALVE
- DUCKBILL CHECK VALVE
- BALL CHECK VALVE
- BACKFLOW PREVENTER (DOUBLE CHECK ASSEMBLY)
- BACKFLOW PREVENTER (REDUCED PRESSURE PRINCIPLE)
- PINCH VALVE
- DIAPHRAGM VALVE
- BUTTERFLY VALVE
- BALL VALVE (NORMALLY OPEN, NORMALLY CLOSED)
- NEEDLE VALVE
- PRESSURE REDUCING VALVE, SELF-CONTAINED
- PRESSURE REDUCING VALVE WITH EXTERNAL PRESSURE TAP
- PRESSURE SUSTAINING VALVE, SELF-CONTAINED
- PRESSURE SUSTAINING VALVE WITH EXTERNAL PRESSURE TAP
- DIFFERENTIAL PRESSURE REGULATING VALVE, SELF-CONTAINED
- DIFFERENTIAL PRESSURE REGULATING VALVE WITH EXTERNAL PRESSURE TAP
- 3-WAY VALVE
- 4-WAY VALVE
- SHADING INDICATES PORT TO BE CLOSED DURING NORMAL OPERATION. DOT INDICATES PORT TO BE CLOSED DURING ALTERNATE OPERATION.
- ANGLE VALVE
- FOOT VALVE
- VACUUM RELIEF/AIR INLET VALVE (AV)
- PRESSURE RELIEF VALVE (PREL)
- AIR RELEASE/VACUUM RELIEF VALVE (ARVR)
- COMBINATION AIR/VACUUM VALVE (CA)
- AIR RELEASE VALVE (AR)
- GATE - NORMALLY CLOSED
- GATE - NORMALLY OPEN
- FLAP GATE

## PRIMARY INLINE ELEMENTS

- ORIFICE PLATE
- M — MAGNETIC FLOW TUBE
- SINGLE PORT PITOT TUBE OR PITOT-VENTURI TUBE
- VENTURI TUBE
- AVERAGING PITOT TUBE
- FLUME
- WEIR
- TURBINE OR PROPELLER-TYPE PRIMARY ELEMENT
- THERMAL MASS SENSOR
- POSITIVE DISPLACEMENT TYPE FLOW TOTALIZING INDICATOR
- VORTEX SENSOR
- TARGET TYPE SENSOR
- CORIOLIS EFFECT SENSOR
- ULTRASONIC SENSOR

## MISCELLANEOUS

- PIPE MATERIAL CHANGE
- A B — ROTAMETER
- A B — ROTAMETER WITH INTEGRAL VALVE
- VENT
- FLAME ARRESTOR
- SILENCER — SILENCER
- SNUBBER
- WEIGH SCALE

## EQUIPMENT

### MISCELLANEOUS

- DU — DRIVE UNIT
- M — MOTOR

### SAFETY

- EYEWASH AND SHOWER
- EYEWASH

### CHEMICAL INJECTION

- INJECTION MIXER
- STATIC MIXER
- CHEMICAL DIFFUSER
- EDUCTOR/INJECTOR

### HEAT EXCHANGERS

- SHELL AND TUBE TYPE
- PLATE AND FRAME TYPE

## EQUIPMENT (CONTINUED)

### CENTRIFUGAL PUMPS

- M — HORIZONTAL
- M — SUBMERSIBLE
- M — VERTICAL TURBINE PUMP HEAD
- M — VERTICAL TURBINE PUMP T-HEAD
- VERTICAL TURBINE PUMP CAN
- VERTICAL TURBINE PUMP INTAKE

### POSITIVE DISPLACEMENT PUMPS

- M — METERING PUMP
- S — METERING SOLENOID
- M — PERISTALTIC/ HOSE PUMP
- M — ROTARY PUMP
- M — PROGRESSIVE CAVITY PUMP

### BLOWERS, FANS AND COMPRESSORS

- M — BLOWER
- M — FAN
- M — CENTRIFUGAL COMPRESSOR
- M — RECIPROCATING COMPRESSOR
- M — SCREW COMPRESSOR

### MIXERS

- M — VERTICAL
- M — SUBMERSIBLE

### CONVEYORS

- HORIZONTAL SCREW
- INCLINED SCREW
- BELT

### THICKENERS AND GRINDERS

- BELT FILTER PRESS
- GRAVITY BELT THICKENER
- CENTRIFUGE
- SLUDGE GRINDER

## PIPING ACCESSORIES AND FITTINGS

- FLANGE
- UNION
- TEE
- Y STRAINER
- FLOW STRAIGHTENING VANE
- SCREWED CAP
- WELDED CAP
- BLIND FLANGE
- QUICK DISCONNECT
- REDUCER (CONCENTRIC)
- REDUCER (ECCENTRIC)
- HB — HOSE BIBB CONNECTION
- CHEMICAL PIPING FLEXIBLE CONNECTION/ FLEXIBLE HOSE
- FLEXIBLE TANK CONNECTION
- BRAIDED METAL HOSE
- METAL BELLOWS
- EXPANSION JOINT
- FLEXIBLE COUPLING
- FLANGED COUPLING ADAPTER
- DJ — DISASSEMBLING JOINT
- DRAIN
- SPRAY NOZZLE
- THERMOWELL
- CALIBRATION CYLINDER
- PULSATION DAMPER
- DIAPHRAGM SEAL
- ANNULAR SEAL
- RUPTURE DISK, PRESSURE
- RUPTURE DISK, VACUUM
- P — PURGE

## VALVE AND GATE OPERATORS

- DIAPHRAGM
- CYLINDER OPERATOR
- DIAPHRAGM PRESSURE BALANCED
- S — SOLENOID
- HAND/MANUAL
- M — MOTOR

## NOTES

1. SEE THE PRECEDING DRAWING FOR EQUIPMENT DESIGNATIONS AND PROCESS IDENTIFICATION CODES.
2. THIS IS A GENERALIZED LEGEND SHEET. SEE ALSO ISA S5.1, S5.3 AND S7.3.

30% SUBMITTAL

PRELIMINARY DESIGN PHASE

NOT FOR CONSTRUCTION

THIS DOCUMENT IS AN INTERIM DOCUMENT AND NOT SUITABLE FOR CONSTRUCTION. AS AN INTERIM DOCUMENT, IT MAY CONTAIN DATA THAT IS POTENTIALLY INACCURATE OR INCOMPLETE AND IS NOT TO BE RELIED UPON WITHOUT THE EXPRESS WRITTEN CONSENT OF THE PREPARER.

| NO | REVISION | DATE | BY |
|---|---|---|---|

SCALES

0 — 1"

0 — 25mm

IF THIS BAR IS NOT DIMENSION SHOWN, ADJUST SCALES ACCORDINGLY.

THIS PRELIMINARY DOCUMENT IS NOT FOR CONSTRUCTION. IT IS RELEASED UNDER THE AUTHORITY OF: SAMANTHA KARPA 21024598 JANUARY 2025

DESIGNED KJ

DRAWN KJ

CHECKED SNK

PORT OF ANACORTES

ANACORTES, WASHINGTON

CURTIS WHARF COMMERCIAL PUMP OUT FACILITY

Kennedy Jenks

GENERAL PROCESS SYMBOLS

SCALE NTS

JOB NO 1996021.19

DATE JANUARY 2025

SHEET OF ---

G-005

Exhibit # F
Page 5 of 16



Plot Date: 1/17/2025 1:13 PM
User: AEKJM MHAJAN
pw:\\kjce-pw.bentley.com:kjce-pw\Documents\Clients\Anacortes, Port of WA\Projects\Curtis Wharf Pump Out Facility Final Design_1996021.19\10-Design\10.06-Drawings\General\1996021.19-G-005.DWG

Plot Date: 1/17/2025 1:13 PM
User: AEKJM MHAJAN
pw:\\kjce-pw.bentley.com:kjce-pw\Documents\Clients\Anacortes, Port of WA\Projects\Curtis Wharf Pump Out Facility Final Design_1996021.19\10-Design\10.06-Drawings\General\1996021.19-G-006.DWG

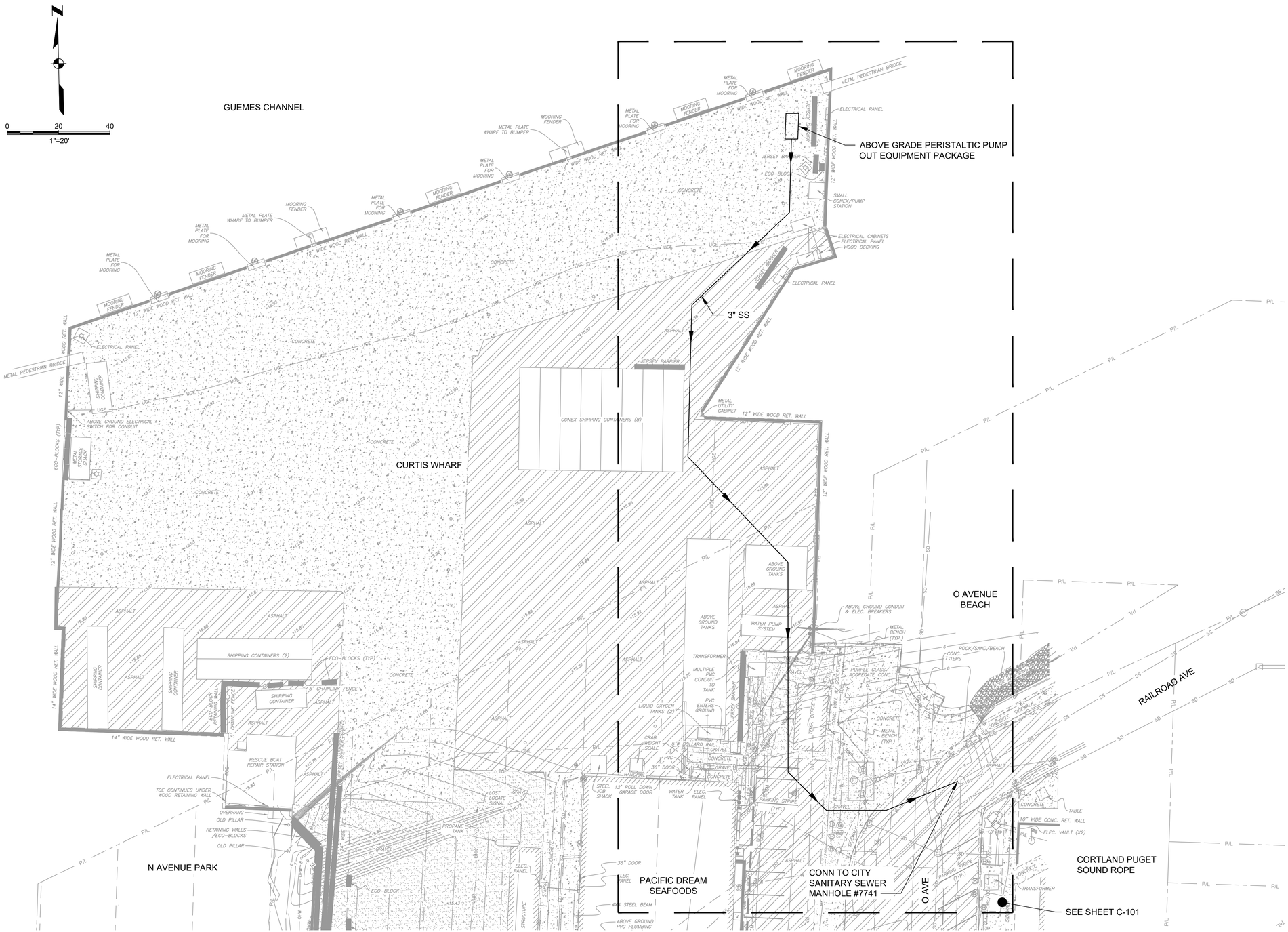


## SURVEY NOTES

GENERAL:

SURVEY WAS CONDUCTED BY PACIFIC SURVEYING & ENGINEERING, INC. BY FIELD TRANSVERSE METHODS UTILIZING ELECTRONIC DATA COLLECTION IN OCTOBER AND NOVEMBER 2022. SURVEY WAS PREPARED IN ACCORDANCE WITH WAC 332-130-145.

HORIZONTAL DATUM: NAD 83/91

VERTICAL DATUM: MEAN LOWER LOW WATER (MLLW) ON NOAA TIDAL DATUM EPOCH 1941-1959, BASED ON PORT OF ANACORTES SURVEY CONTROL MONUMENT "JETTY-2"

THE CONTRACTOR SHALL LAYOUT THE WORK (EMPLOYING A PROFESSIONAL LAND SURVEYOR LICENSED IN THE STATE OF WASHINGTON) FROM THE CONTROL POINTS PROVIDED AND SHALL BE RESPONSIBLE FOR ACCURATE LOCATION, ALIGNMENT, ELEVATION AND LEVEL OF COMPLETED WORK.

TIDE LEVELS:

| | |
|---|---|
| EHW | 11.00 |
| OHW | 10.20 |
| MHHW | 8.20 |
| MHW | 7.40 |
| MTL | 5.00 |
| MSL | 4.42 |
| MLW | 2.60 |
| MLLW | 0.00 |
| ELW | -4.50 |

30% SUBMITTAL

PRELIMINARY DESIGN PHASE

NOT FOR CONSTRUCTION

THIS DOCUMENT IS AN INTERIM DOCUMENT AND NOT SUITABLE FOR CONSTRUCTION. AS AN INTERIM DOCUMENT, IT MAY CONTAIN DATA THAT IS POTENTIALLY INACCURATE OR INCOMPLETE AND IS NOT TO BE RELIED UPON WITHOUT THE EXPRESS WRITTEN CONSENT OF THE PREPARER.

| NO | REVISION | DATE | BY |
|---|---|---|---|

SCALES
0 — 1"
0 — 25mm
IF THIS BAR IS NOT DIMENSION SHOWN, ADJUST SCALES ACCORDINGLY.

THIS PRELIMINARY DOCUMENT IS NOT FOR CONSTRUCTION. IT IS RELEASED UNDER THE AUTHORITY OF: SAMANTHA KARPA 21024598 JANUARY 2025

DESIGNED SNK
DRAWN AKM
CHECKED SNK

PORT OF ANACORTES
ANACORTES, WASHINGTON
CURTIS WHARF COMMERCIAL PUMP OUT FACILITY

Kennedy Jenks

OVERALL SITE PLAN, SURVEY CONTROL, AND KEY MAP

SCALE 1" = 20'
JOB NO 1996021.19
DATE JANUARY 2025
SHEET OF ---
G-006

Exhibit # E
Page 6 of 16

# CIVIL NOTES

GENERAL

1. OBTAIN PERMITS NECESSARY TO COMPLETE FEATURES WITHIN EASEMENTS, DEDICATIONS AND PUBLIC RIGHT-OF-WAY.
2. COORDINATES ARE PROVIDED AS FOLLOWS UNLESS OTHERWISE NOTED ON DRAWINGS:
   2.1. FACE OF WALL
   2.2. FACE OF CURB
   2.3. CORNER OF EQUIPMENT PADS AND VAULTS
3. ORIENT SURFACE FEATURES PARALLEL TO CURB/GUTTER OR WALLS UNLESS OTHERWISE NOTED.
4. PROTECT ALL SURVEY MONUMENTS.
5. SHOULD THE CONTRACTOR DISCOVER ANY DISCREPANCIES BETWEEN THE CONDITIONS EXISTING IN THE FIELD AND THE INFORMATION SHOWN ON THESE DRAWINGS, CONTRACTOR SHALL NOTIFY THE OWNER PRIOR TO PROCEEDING WITH CONSTRUCTION.
6. THE CONTRACTOR SHALL MAINTAIN A COPY OF AN APPROVED SET OF PLANS ON THE CONSTRUCTION SITE AT ALL TIMES.
7. "LIMITS OF EXCAVATION" INDICATES THE MINIMUM MATERIAL REMOVAL REQUIRED DUE TO GEOTECHNICAL RECOMMENDATIONS AND THE NATURE OF THE WORK. TAKE CARE NOT TO EXCAVATE BEYOND THE LIMITS INDICATED IN THE CONTRACT DOCUMENTS.
8. "LIMITS OF GRADING" INDICATES THE MINIMUM DISTURBANCE AREA DUE TO FINISH GRADES. LIMITS OF GRADING MAY NOT BE INCLUSIVE OF ALL PIPING, CONDUITS, OR DUCT BANKS. LIMITS OF GRADING MAY ALSO BE CALLED DAYLIGHT OR CONFORM LINE, WHICH ARE INTENDED TO BE INTERCHANGEABLE.
9. "LIMITS OF WORK" INDICATES THE TOTAL AREA OF DISTURBANCE DUE TO THE NATURE AND SCOPE OF THE WORK. THE TERM MAY ALSO BE USED TO INDICATE AREAS WHERE ACCESS IS LIMITED OR RESTRICTED.
10. PROVIDE TEMPORARY TRAFFIC SIGNAGE IN ACCORDANCE WITH STATE AND LOCAL AGENCIES DURING THE COURSE OF CONSTRUCTION.
11. THE CONTRACTOR SHALL BE RESPONSIBLE FOR ALL TRAFFIC CONTROL WITHIN THE PUBLIC RIGHT OF WAY IN ACCORDANCE WITH LOCAL ORDINANCES. NO WORK SHALL COMMENCE UNTIL ALL REQUIRED TRAFFIC CONTROL MEASURES ARE IN PLACE.

PIPING

1. THESE NOTES ARE GENERIC IN NATURE. PROJECT SPECIFIC NOTES ON FOLLOWING DRAWINGS TAKE PRECEDENCE.
2. THE CONTRACTOR SHALL COMPLY WITH THE STATE DEPARTMENT OF HEALTH SERVICES CRITERIA FOR THE SEPARATION BETWEEN WATER MAINS, NON-POTABLE WATER UTILITIES, AND SEWER.
3. INSTALL WATER, STORM, AND SEWER PIPELINES WITH A MINIMUM OF 36 INCHES OF COVER, UNLESS OTHERWISE NOTED.
4. PRIOR TO SUBMITTAL OF PIPE SHOP DRAWINGS, VERIFY THE INVERT ELEVATIONS, ALIGNMENT, OUTSIDE DIAMETER, LOCATION, AND MATERIAL OF ALL EXISTING PIPELINES TO WHICH NEW PIPELINES WILL BE CONNECTED.
5. PIPE STATIONING REPRESENTS THE HORIZONTAL PROJECTION OF THE PIPE CENTERLINE BETWEEN MANHOLES, POINTS OF INFLECTION, AND/OR CENTER OF FITTINGS.
6. RESTRAIN ALL PIPE, FITTINGS, FLEXIBLE CONNECTORS, AND/OR FLANGED COUPLING ADAPTERS UNLESS OTHERWISE NOTED. THRUST PROTECTION SHALL BE ADEQUATE FOR TEST PRESSURES SPECIFIED.
7. LOCATION OF EXISTING UTILITIES ARE APPROXIMATE. CONTRACTOR SHALL EXPOSE EXISTING PIPE(S) OR STRUCTURE(S) TO WHICH NEW PIPE(S) IS/ARE CONNECTING. VERIFY EXACT LOCATION, SIZE, MATERIALS, AND INVERT ELEVATIONS PRIOR TO SUBMITTING PIPE DRAWINGS.
8. PROTECT EXISTING UTILITIES UNLESS OTHERWISE NOTED.
9. USE CAUTION WHEN WORKING IN PROXIMITY TO GAS. NOTIFY UTILITY COMPANY WHEN WORKING WITHIN THE VICINITY, AND FOLLOW UTILITY SAFETY GUIDELINES AND OSHA REQUIREMENTS. HAND DIG ALL CONSTRUCTION WITHIN 5 FEET HORIZONTALLY OF ANY GAS MAIN.
10. USE CAUTION WHEN WORKING IN PROXIMITY TO OVERHEAD ELECTRICAL LINES. FOLLOW ELECTRICAL UTILITY SAFETY GUIDELINES AND OSHA REQUIREMENTS.
11. CROSSING PIPELINES SHOWN IN PROFILE REPRESENT OUTSIDE DIAMETER UNLESS OTHERWISE NOTED.
12. ORIENT ECCENTRIC MANHOLE(S) SUCH THAT THE LID IS OUTSIDE OF WHEEL PATH.
13. COORDINATES LOCATING MANHOLES ARE TO THE CENTER OF THE STRUCTURE.
14. SIZE OF FITTING SHOWN ON THE DRAWINGS CORRESPONDS TO THE ADJACENT STRAIGHT RUN OF PIPE, UNLESS OTHERWISE NOTED. MATCH TYPE OF JOINT AND FITTING MATERIAL TO ADJACENT STRAIGHT RUN OF PIPE, UNLESS OTHERWISE NOTED.
15. PIPE HANGER AND SUPPORT LOCATIONS SHOWN ARE APPROXIMATE. FINAL PIPE SUPPORT LOCATIONS SHALL BE SUBMITTED BY THE CONTRACTOR AND APPROVED BY THE ENGINEER PRIOR TO INSTALLATION.
16. NUMBER AND LOCATION OF UNIONS SHOWN ON DRAWINGS ARE APPROXIMATE. PROVIDE UNIONS NECESSARY TO FACILITATE CONVENIENT REMOVAL OF VALVES AND MECHANICAL EQUIPMENT.
17. COORDINATE AND PERFORM CONNECTIONS TO THE WORK OF OTHER CONTRACTORS, IF APPLICABLE.

30% SUBMITTAL

PRELIMINARY DESIGN PHASE

NOT FOR CONSTRUCTION

THIS DOCUMENT IS AN INTERIM DOCUMENT AND NOT SUITABLE FOR CONSTRUCTION. AS AN INTERIM DOCUMENT, IT MAY CONTAIN DATA THAT IS POTENTIALLY INACCURATE OR INCOMPLETE AND IS NOT TO BE RELIED UPON WITHOUT THE EXPRESS WRITTEN CONSENT OF THE PREPARER.

| NO | REVISION | DATE | BY |
|---|---|---|---|

SCALES
0 — 1"
0 — 25mm
IF THIS BAR IS NOT DIMENSION SHOWN, ADJUST SCALES ACCORDINGLY.

THIS PRELIMINARY DOCUMENT IS NOT FOR CONSTRUCTION. IT IS RELEASED UNDER THE AUTHORITY OF: SAMANTHA KARPA 21024598 JANUARY 2025

DESIGNED KJ
DRAWN KJ
CHECKED SNK

PORT OF ANACORTES
ANACORTES, WASHINGTON
CURTIS WHARF COMMERCIAL PUMP OUT FACILITY

Kennedy Jenks

CIVIL NOTES

SCALE NTS
JOB NO 1996021.19
DATE JANUARY 2025
SHEET OF ---
C-001

Exhibit # F
Page 7 of 16

Plot Date: 1/17/2025 1:13 PM
User: AEKJM MHAJAN
pw:\\kjce-pw.bentley.com:kjce-pw\Documents\Clients\Anacortes, Port of WA\Projects\Curtis Wharf Pump Out Facility Final Design_1996021.19\10-Design\10.06-Drawings\Civil\1996021.19-C-001

## GEOTECHNICAL SYMBOLS

- SOIL BORING LOCATION
- TEST PIT LOCATION
- MONITORING WELL

## TOPOGRAPHY AND MAPPING SYMBOLS

- MAJOR CONTOURS
- MINOR CONTOURS
- TOP OF SLOPE
- TOE OF SLOPE
- PROPERTY LINE
- RIGHT-OF-WAY LINE
- GRADE BREAK
- RIDGE LINE
- EASEMENT LINE
- TEMPORARY EASEMENT LINE
- TRAIL OR DIRT ROAD
- FLOW LINE
- FLOOD HAZARD AREA
- EDGE OF WETLANDS
- RAILROAD
- SITE OR RETAINING WALL
- GUARDRAIL (PERMANENT)
- LIMITS OF GRADING
- LIMITS OF EXCAVATION

## EXISTING UTILITIES

- STORM DRAIN LINE
- SANITARY SEWER GRAVITY LINE
- WATER LINE
- OVERHEAD ELECTRIC & COMMUNICATION LINES
- UNDERGROUND POWER
- UNKNOWN UNDERGROUND UTILITY
- UNDERGROUND COMMUNICATIONS LINE
- OVERHEAD COMMUNICATIONS LINE
- UNDERGROUND GAS LINE

## EXISTING FEATURES

- MONUMENT
- SET MAG NAIL
- SET SPIKE
- SET RAILROAD SPIKE
- STORM DRAIN MANHOLE
- STORM DRAIN CLEANOUT
- CATCH BASIN
- DOWNSPOUT
- SANITARY SEWER MANHOLE
- GATE VALVE
- WATER METER
- FIRE HYDRANT
- HOSE BIB
- FIRE STANDPIPE
- IRRIGATION BOX
- MONITORING WELL
- BOLLARD
- POST
- STOP SIGN
- STREET SIGN
- FLAG POLE
- POWER POLE W/DROP
- STREET LIGHT POLE W/ DROP
- GROUND GUY
- DROP FROM POLE
- TELEPHONE PEDESTAL/RISER
- ELECTRIC METER/SWITCH
- SPOT ELEVATION ON EXISTING GROUND
- TOP OF SLOPE LINE
- TOE OF SLOPE LINE
- ORDINARY HIGH WATER LINE
- CHAINLINK FENCE
- HANDRAIL

## PIPING AND UTILITIES

- AV/AR VALVE (IN PLAN) LOCATE ON SIDE SHOWN
- AV/AR VALVE (IN PROFILE)
- BLOWOFF (IN PLAN) LOCATE ON SIDE SHOWN
- BLOWOFF (IN PROFILE)
- FIRE HYDRANT (IN PLAN)
- MANHOLE (IN PLAN)
- CLEANOUT TO GRADE (IN PLAN)

## ROADWORK AND PAVING

NOTES:
1. PAVING PATTERNS MAY ONLY APPEAR IN PORTIONS OF PAVED AREAS TO DEFINE LIMITS OF PAVING.
2. SEE ALSO GENERAL LEGEND FOR ADDITIONAL PAVING PATTERNS.

- ASPHALT (IN PLAN AND SECTION)
- CONCRETE CURB
- CONCRETE CURB AND GUTTER
- DRIVEWAY/ACCESS RAMP
- WELDED WIRE FABRIC (IN SECTION)

## CONTROL SYMBOLS

- BENCH MARK
- SITE COORDINATES (SEE TABLE ON DRAWINGS)
- SITE COORDINATES
- CONTROL POINT
- MONUMENT
- FINISHED ELEVATION/GRADE
- EXISTING ELEVATION/GRADE
- CURVE DATA (SEE TABLE ON DRAWINGS)

## STRUCTURES

- FENCE (CHAIN LINK)
- FENCE (WOOD)
- FENCE (SWING GATE)
- BOLLARD
- BOLLARD (REMOVABLE)
- STRUCTURE
- STRUCTURE (BELOW GRADE)

30% SUBMITTAL

PRELIMINARY DESIGN PHASE

NOT FOR CONSTRUCTION

THIS DOCUMENT IS AN INTERIM DOCUMENT AND NOT SUITABLE FOR CONSTRUCTION. AS AN INTERIM DOCUMENT, IT MAY CONTAIN DATA THAT IS POTENTIALLY INACCURATE OR INCOMPLETE AND IS NOT TO BE RELIED UPON WITHOUT THE EXPRESS WRITTEN CONSENT OF THE PREPARER.

| NO | REVISION | DATE | BY |
|---|---|---|---|

SCALES

0 — 1"

0 — 25mm

IF THIS BAR IS NOT DIMENSION SHOWN, ADJUST SCALES ACCORDINGLY.

THIS PRELIMINARY DOCUMENT IS NOT FOR CONSTRUCTION. IT IS RELEASED UNDER THE AUTHORITY OF: SAMANTHA KARPA 21024598 JANUARY 2025

DESIGNED KJ

DRAWN KJ

CHECKED SNK

PORT OF ANACORTES

ANACORTES, WASHINGTON

CURTIS WHARF COMMERCIAL PUMP OUT FACILITY

Kennedy Jenks

CIVIL LEGEND

SCALE NTS

JOB NO 1996021.19

DATE JANUARY 2025

SHEET OF ---

C-002

Exhibit # F
Page 8 of 16



pw:\\kjce-pw.bentley.com:kjce-pw\Documents\Clients\Anacortes, Port of WA\Projects\Curtis Wharf Pump Out Facility Final Design_1996021.19\10-Design\10.06-Drawings\Civil\1996021.19-C-002
Plot Date: 1/17/2025 1:13 PM
User: AEKJM MHAJAN

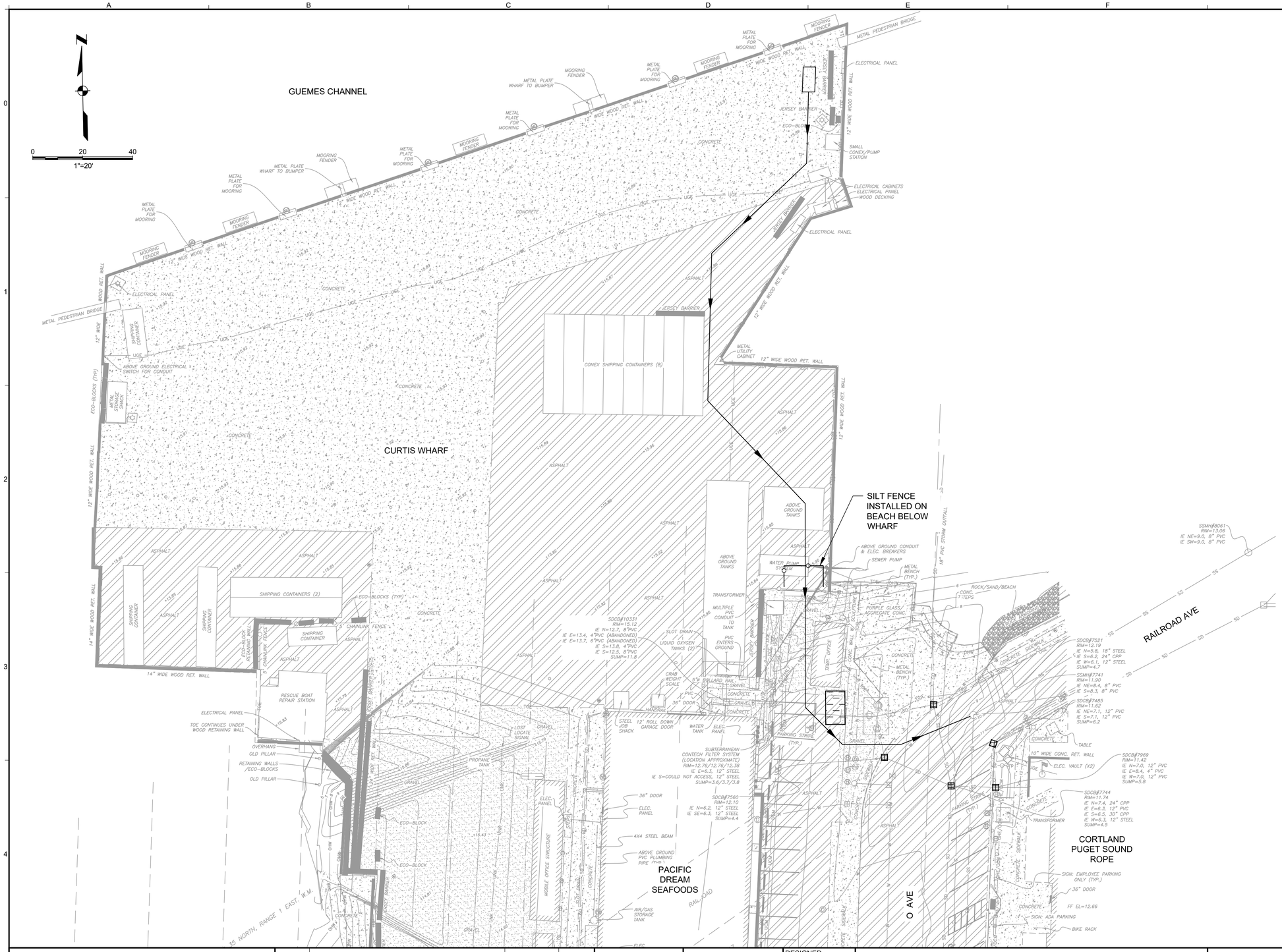


# EROSION AND SEDIMENT CONTROL NOTES

1. THE CONTRACTOR SHALL CONDUCT ALL EROSION AND SEDIMENT CONTROL PRACTICES IN ACCORDANCE WITH THE SPECIFICATIONS AND CONSTRUCTION SWPPP.
2. THE IMPLEMENTATION OF TESC PLANS AND THE CONSTRUCTION, MAINTENANCE, REPLACEMENT, UPGRADING, AND REMOVAL OF TESC FACILITIES SHALL BE THE RESPONSIBILITY OF THE CONTRACTOR UNTIL ALL CONSTRUCTION IS COMPLETE AND APPROVED.
3. CONTRACTOR SHALL PERFORM ALL TESC MEASURES AS NECESSARY TO ENSURE NO AGGREGATE, PAVEMENT, SOIL, OR OTHER MATERIALS ARE TRACKED OUT OF THE WORK AREA. TESC FACILITIES SHALL BE UPGRADED AS NECESSARY TO ENSURE THAT SEDIMENT AND SEDIMENT-LADEN WATER DOES NOT LEAVE THE WORK LIMITS.
4. CONTRACTOR SHALL INSTALL STORMWATER INLET PROTECTION FOR ALL INLETS WITHIN THE WORK LIMITS AND WITHIN 100 FEET OF THE WORK LIMITS AND ALL HAUL ROUTES. SEE DETAIL 1 ON SHEET C-102. INLET PROTECTION SHALL BE MAINTAINED UNTIL THE INLET IS DEMOLISHED (IF CALLED FOR) OR UNTIL ALL CONSTRUCTION IS COMPLETE AND APPROVED, AS APPLICABLE.
5. AT NO TIME SHALL MORE THAN 1 FOOT OF SEDIMENT BE ALLOWED TO ACCUMULATE WITHIN THE STORMWATER INLET PROTECTION.
6. ALL PROPOSED TESC FACILITIES SHALL BE SUBMITTED TO THE ENGINEER FOR REVIEW.
7. ALL TESC FACILITIES SHALL BE CONSTRUCTED PRIOR TO CONSTRUCTION ACTIVITIES AND IN SUCH A MANNER AS TO ENSURE THAT CONSTRUCTION STORMWATER DOES NOT ENTER THE DRAINAGE SYSTEM OR ADJACENT WATER BODY, OR VIOLATE APPLICABLE WATER QUALITY STANDARDS.
8. STABILIZATION SHALL BE PROVIDED FOR STOCKPILE(S) AND UPGRADED AS NECESSARY TO MINIMIZE SEDIMENT LOSSES, AS SHOWN IN DETAIL 2 OF SHEET C-004.
9. STOCKPILE, CONTRACTOR LAYDOWN, AND MATERIAL STAGING LOCATIONS SHALL BE IDENTIFIED IN THE FIELD WITH THE PORT PRIOR TO CONSTRUCTION. STOCKPILES(S) SHALL BE SURROUNDED BY ECOLOGY BLOCKS, BARRICADES, HIGH VISIBILITY FENCING AND/OR OTHER MEASURES TO PROVIDE FOR PUBLIC, PORT, AND CONTRACTOR SAFETY.
10. TRACK OUT FROM THE STOCKPILE SHALL BE MINIMIZED, AND PRIOR TO FINAL CLOSEOUT, STOCKPILE AREA SHALL BE CLEARED OF ACCUMULATED OR STRAY SEDIMENT.
11. TRACK OUT ONTO PUBLIC ROADS SHALL BE PREVENTED. IN THE EVENT IT OCCURS, A SWEEPER TRUCK OR OTHER TESC MEASURES SHALL BE USED TO COLLECT AND REMOVE ANY TRACKED OUT SEDIMENT FROM PUBLIC ROADS BY THE END OF THE WORK DAY.

## LEGEND

| | |
|---|---|
| CATCH BASIN FILTER | 1 / C-002 |
| STOCKPILE LOCATION | 2 / C-002 |
| SILT FENCE | 3 / C-002 |

30% SUBMITTAL

PRELIMINARY DESIGN PHASE

NOT FOR CONSTRUCTION

THIS DOCUMENT IS AN INTERIM DOCUMENT AND NOT SUITABLE FOR CONSTRUCTION. AS AN INTERIM DOCUMENT, IT MAY CONTAIN DATA THAT IS POTENTIALLY INACCURATE OR INCOMPLETE AND IS NOT TO BE RELIED UPON WITHOUT THE EXPRESS WRITTEN CONSENT OF THE PREPARER.

| NO | REVISION | DATE | BY |
|---|---|---|---|

SCALES

0 — 1"

0 — 25mm

IF THIS BAR IS NOT DIMENSION SHOWN, ADJUST SCALES ACCORDINGLY.

THIS PRELIMINARY DOCUMENT IS NOT FOR CONSTRUCTION. IT IS RELEASED UNDER THE AUTHORITY OF: SAMANTHA KARPA 21024598 JANUARY 2025

DESIGNED KJ

DRAWN AKM

CHECKED SNK

PORT OF ANACORTES

ANACORTES, WASHINGTON

CURTIS WHARF COMMERCIAL PUMP OUT FACILITY

Kennedy Jenks

EROSION AND SEDIMENT CONTROL PLAN AND NOTES

SCALE 1" = 20'

JOB NO 1996021.19

DATE JANUARY 2025

SHEET OF ---

C-003

REVIEWED FOR PLANNING COMPLIANCE CITY OF ANACORTES

Exhibit # E
Page 9 of 16

Plot Date: 1/17/2025 1:13 PM

User: AEKJM MHAJAN

pw:\\kjce-pw.bentley.com:kjce-pw\Documents\Clients\Anacortes, Port of WA\Projects\Curtis Wharf Pump Out Facility Final Design_1996021.19\10-Design\10.06-Drawings\Civil\1996021.19-C-003

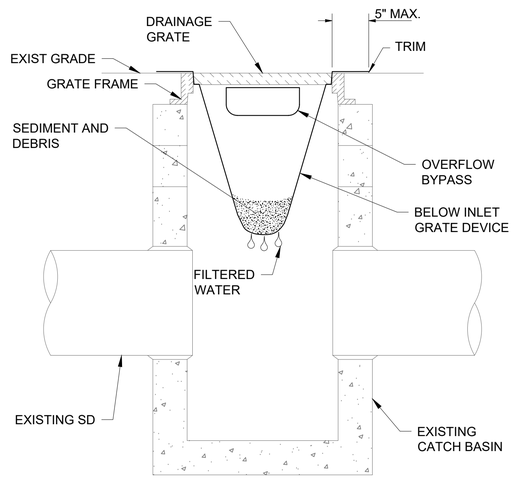


1 C-002 CATCH BASIN FILTER
SCALE: NTS

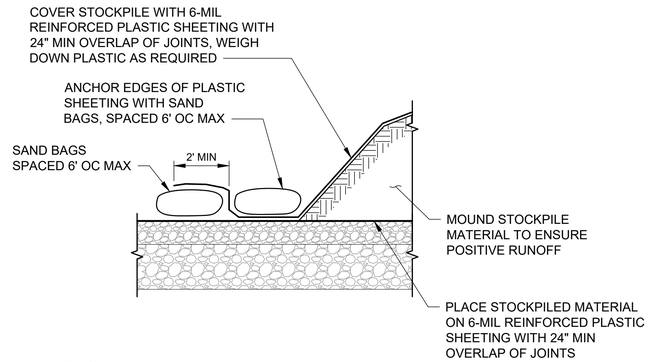


NOTES:
1. RIPS AND/OR TEARS IN THE PLASTIC SHEETING SHALL BE REPAIRED IN A TIMELY MANNER.
2. MATERIAL SHALL BE STOCKPILED NO STEEPER THAN 1 TO 1 SLOPE.
3. THE TOE OF THE STOCKPILE SHALL BE NO CLOSER THAN 2-FT FROM THE EDGE OF EXCAVATION.
4. STOCKPILE HEIGHT SHALL NOT EXCEED 10-FT.

2 C-002 STOCKPILE
SCALE: NTS

NOTES:
1. SILT FENCE EXTENTS SHOWN ON THE PLANS ARE APPROXIMATE. CONTRACTOR IS RESPONSIBLE FOR MODIFYING THE EXTENTS OF THE SILT FENCE AS NECESSARY TO PREVENT SEDIMENT AND SEDIMENT-LADEN RUNOFF FROM LEAVING THE CONSTRUCTION SITE.
2. REFER TO THE SPECIFICATIONS SECTION 01 57 13 FOR COMPLETE EROSION AND SEDIMENT CONTROL REQUIREMENTS.
3. BURY BOTTOM OF FILTER FABRIC 6" MIN. VERTICALLY BELOW FINISHED GRADE.
4. 2" x 2" FIR, PINE, OR STEEL FENCE POSTS.
5. STITCHED LOOPS TO BE INSTALLED ON UPHILL SIDE OF SLOPE.
6. COMPACT NATIVE FILL IN ALL AREAS OF FILTER FABRIC TRENCH.
7. DURING EXCAVATION, MINIMIZE DISTURBING THE GROUND AROUND TRENCH AS MUCH AS IS FEASIBLE, SMOOTH SURFACE FOLLOWING EXCAVATION TO AVOID CONCENTRATING FLOWS.

SEDIMENT FENCE SPACING:

| SLOPE | SPACING |
|---|---|
| <10% | 300 FT. |
| <15% | 150 FT. |
| <20% | 100 FT. |
| <30% | 50 FT. |
| <50% | 25 FT. |
| STOCK PILE SLOPE >50% | 25 FT. |

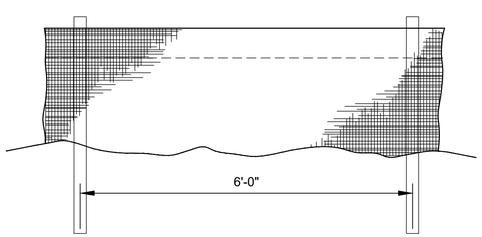


**FRONT VIEW**

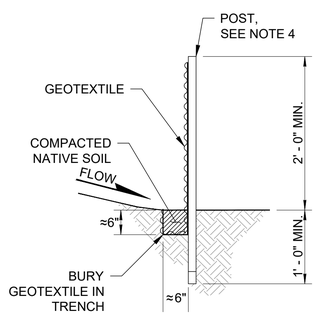


**SIDE VIEW**

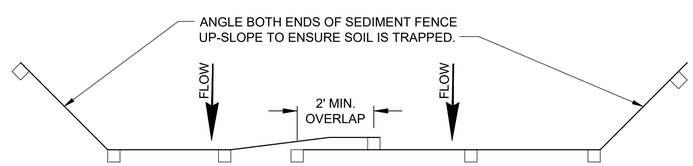


**TOP VIEW**

3 C-002 SILT FENCE
SCALE: NTS

30% SUBMITTAL

PRELIMINARY DESIGN PHASE

NOT FOR CONSTRUCTION

THIS DOCUMENT IS AN INTERIM DOCUMENT AND NOT SUITABLE FOR CONSTRUCTION. AS AN INTERIM DOCUMENT, IT MAY CONTAIN DATA THAT IS POTENTIALLY INACCURATE OR INCOMPLETE AND IS NOT TO BE RELIED UPON WITHOUT THE EXPRESS WRITTEN CONSENT OF THE PREPARER.

| NO | REVISION | DATE | BY |
|---|---|---|---|

SCALES
0 — 1"
0 — 25mm
IF THIS BAR IS NOT DIMENSION SHOWN, ADJUST SCALES ACCORDINGLY.

THIS PRELIMINARY DOCUMENT IS NOT FOR CONSTRUCTION. IT IS RELEASED UNDER THE AUTHORITY OF: SAMANTHA KARPA 21024598 JANUARY 2025

DESIGNED KJ
DRAWN KJ
CHECKED SNK

PORT OF ANACORTES
ANACORTES, WASHINGTON
CURTIS WHARF COMMERCIAL PUMP OUT FACILITY

Kennedy Jenks

EROSION AND SEDIMENT CONTROL DETAILS

SCALE NTS
JOB NO 1996021.19
DATE JANUARY 2025
SHEET OF ---
C-004

Exhibit # F
Page 10 of 16

Plot Date: 1/17/2025 1:13 PM
User: AEKJM MHAJAN
pw:\\kjce-pw.bentley.com:kjce-pw\Documents\Clients\Anacortes, Port of WA\Projects\Curtis Wharf Pump Out Facility Final Design_1996021.19\10-Design\10.06-Drawings\Civil\1996021.19-C-004

## GENERAL SHEET NOTES

1. UTILITY LOCATIONS SHOWN IN DRAWINGS ARE APPROXIMATE AND MAY NOT INCLUDE ALL UTILITIES OR FULL EXTENT OF UTILITY LINES.

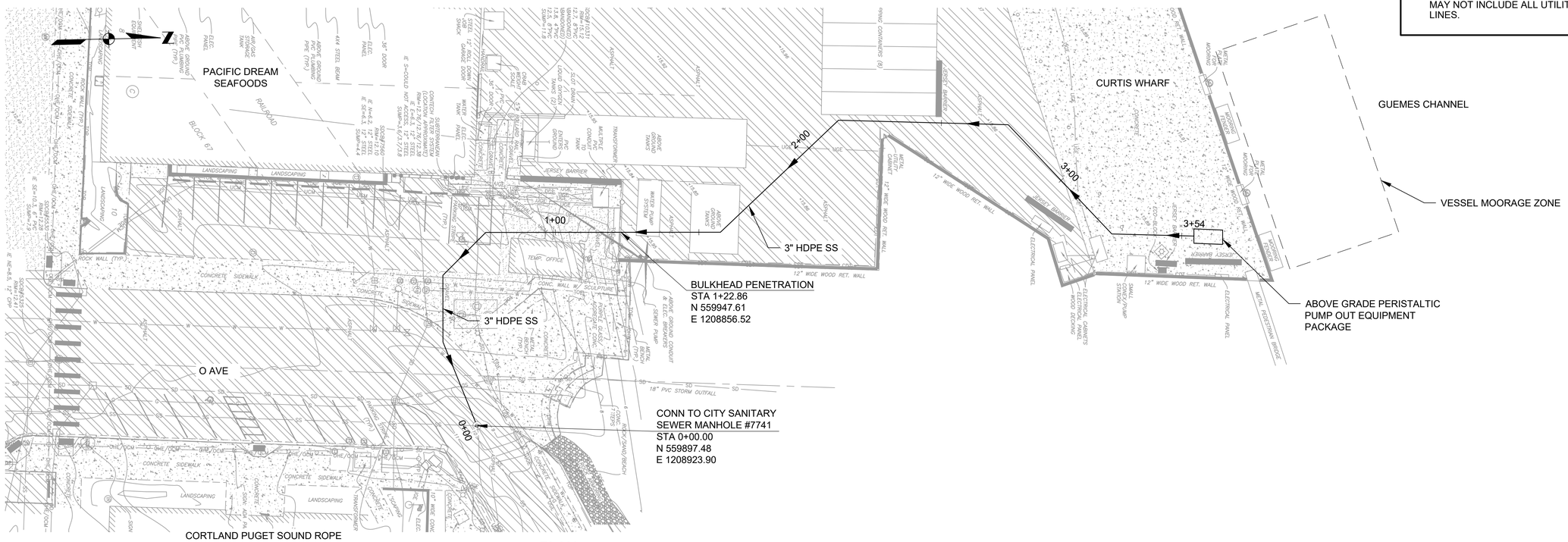


PLAN

0 20 40
1"=20'

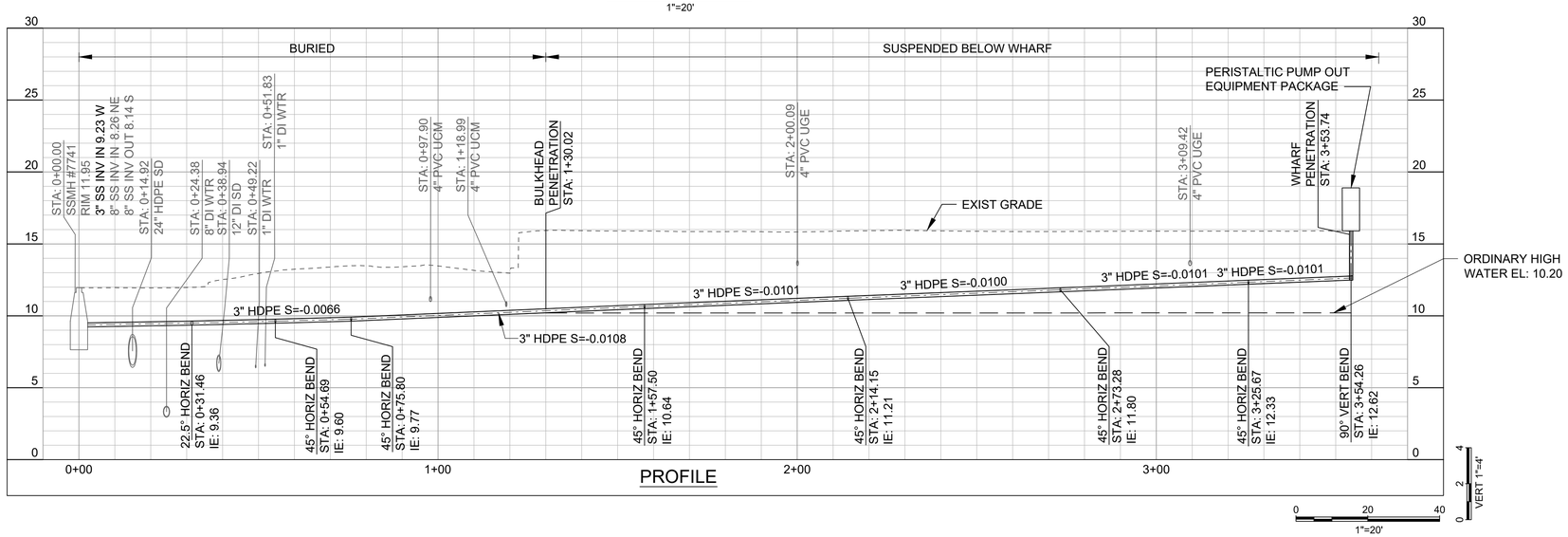


PROFILE

0 20 40
1"=20'

VERT 1"=4'

| | | | |
|---|---|---|---|
| 30% SUBMITTAL | | | |
| PRELIMINARY DESIGN PHASE<br>NOT FOR CONSTRUCTION<br>THIS DOCUMENT IS AN INTERIM DOCUMENT AND NOT SUITABLE FOR CONSTRUCTION. AS AN INTERIM DOCUMENT, IT MAY CONTAIN DATA THAT IS POTENTIALLY INACCURATE OR INCOMPLETE AND IS NOT TO BE RELIED UPON WITHOUT THE EXPRESS WRITTEN CONSENT OF THE PREPARER. | NO | REVISION | DATE / BY |

SCALES
0 — 1"
0 — 25mm
IF THIS BAR IS NOT DIMENSION SHOWN, ADJUST SCALES ACCORDINGLY.

THIS PRELIMINARY DOCUMENT IS NOT FOR CONSTRUCTION. IT IS RELEASED UNDER THE AUTHORITY OF: SAMANTHA KARPA 21024598 JANUARY 2025

DESIGNED KJ
DRAWN AKM
CHECKED SNK

PORT OF ANACORTES
ANACORTES, WASHINGTON
CURTIS WHARF COMMERCIAL PUMP OUT FACILITY

Kennedy Jenks

SANITARY SEWER CONVEYANCE PLAN AND PROFILE

SCALE 1" = 20'
JOB NO 1996021.19
DATE JANUARY 2025
SHEET OF ---
C-101

Exhibit # F
Page 11 of 16

Plot Date: 1/17/2025 2:31 PM
User: AEKUM MHAJAN
pw:\\kjce-pw.bentley.com:kjce-pw\Documents\Clients\Anacortes, Port of WA\Projects\Curtis Wharf Pump Out Facility Final Design_1996021.19\10-Design\10.06-Drawings\Civil\1996021.19-C-101

# PORT OF ANACORTES

## CURTIS WHARF ELECTRIFICATION

## ANACORTES, WA

### PROJECT #: W3Y20401

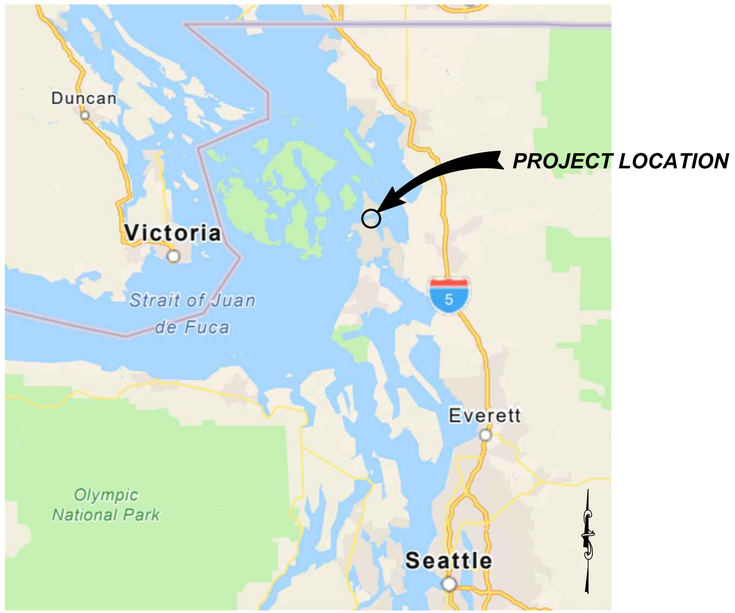


SOURCE: WA STATE PARKS GIS, ESRI, TOMTOM, GARMIN, FAO, NOAA, USGS, BUREAU OF LAND MANAGEMENT, EPA NPS, USFWS.

VICINITY MAP

| No. | SHEET TITLE |
|---|---|
| G-001 | COVER SHEET |
| V-101 | EXISTING UTILITIES |
| E-101 | SITE PLAN |
| E-601 | DEMOLITION ONE-LINE DIAGRAM |
| E-602 | CONSTRUCTION ONE-LINE DIAGRAM |

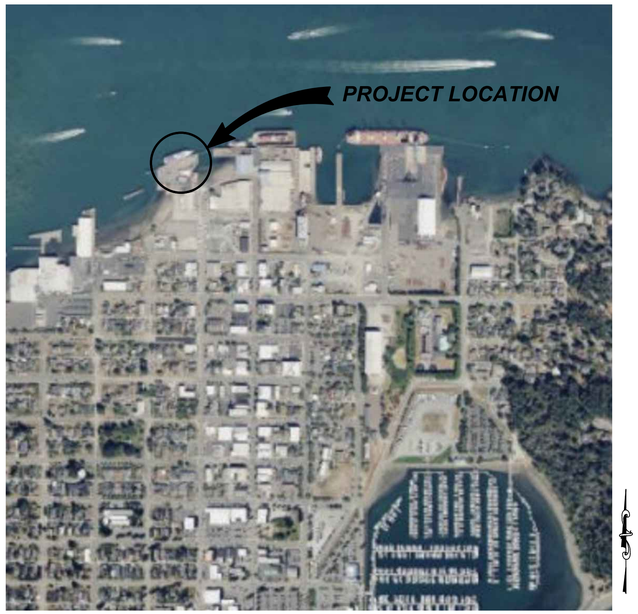


SOURCE: BING; 2024 MICROSOFT CORPORATION; 2024 MAXAR; CNES (2024) DISTRIBUTION AIRBUS DS.

SITE MAP

Jacobs

| NO. | DATE | BY | REVISION |
|---|---|---|---|
| | | | |
| | | | |
| | | | |
| | | | |
| | | | |
| | | | |

PORT OF ANACORTES
CURTIS WHARF ELECTRIFICATION

COVER SHEET

| | | | |
|---|---|---|---|
| DRAWN: | | PROJ NO.: | W3Y20401 |
| DESIGN: | | SCALE: | N/A |
| CHECKED: | | DATE: | 09/2024 |
| SHEET NO. | G-001 of 5 | | |

30% SUBMITTAL

Exhibit # F
Page 12 of 16

## SYMBOL LEGEND

- = EXISTING MONUMENT
- = SET HUB AND MAG
- = SET MAG NAIL
- = SET SPIKE
- = SET NAIL/FLASHER
- = SET CHISELED "X"
- = SET RAILROAD SPIKE
- = EXISTING STORM DRAIN MANHOLE
- = EXISTING STORM DRAIN CLEANOUT
- = EXISTING DRAIN
- = EXISTING CATCH BASIN
- = EXISTING DOWNSPOUT
- = EXISTING SANITARY SEWER MANHOLE
- = EXISTING GATE VALVE
- = EXISTING WATER METER
- = EXISTING FIRE HYDRANT
- = EXISTING HOSE BIB
- = EXISTING WATER MANHOLE
- = EXISTING FIRE STANDPIPE
- = EXISTING IRRIGATION BOX
- = EXISTING MONITORING WELL
- = EXISTING BOLLARD
- = EXISTING POST
- = EXISTING MARINE VESSEL MOORING DOLPHIN
- = EXISTING STOP SIGN
- = EXISTING STREET SIGN
- = EXISTING FLAG POLE
- = EXISTING POWER POLE
- drp = EXISTING POWER POLE W/DROP
- = EXISTING STREET LIGHT POLE
- drp = EXISTING STREET LIGHT POLE W/ DROP
- = EXISTING YARD LIGHT
- = EXISTING GROUND GUY
- drp = EXISTING DROP FROM POLE
- = EXISTING TELEPHONE PEDESTAL/RISER
- = EXISTING ELECTRIC METER/SWITCH
- = SPOT ELEVATION ON EXISTING GROUND
- = EXISTING ASPHALT SURFACING
- = EXISTING CONCRETE SURFACING
- = EXISTING GRAVEL SURFACING

## EXISTING LINE LEGEND

- = EXISTING EDGE OF ASPHALT
- = EXISTING EDGE OF CONCRETE
- = EXISTING EDGE OF GRAVEL ROAD
- = EXISTING CURB
- = EXISTING SIDEWALK
- = EXISTING EDGE OF MASONRY PAVERS
- = EXISTING STRIPE (SKIP YELLOW)
- = EXISTING WHITE STRIPE
- = EXISTING STOP BAR
- = EXISTING STRIPE (CROSS WALK)
- SD = EXISTING STORM DRAIN LINE
- SS = EXISTING SANITARY SEWER GRAVITY LINE
- W = EXISTING WATER LINE
- OHE/OCM = EXISTING OVERHEAD ELECTRIC & COMMUNICATION LINES
- UGE = EXISTING UNDERGROUND POWER
- UCM = EXISTING UNDERGROUND COMMUNICATIONS LINE
- OCM = EXISTING OVERHEAD COMMUNICATIONS LINE
- CDT = EXISTING ABOVE GROUND CONDUIT LINE
- G = EXISTING UNDERGROUND GAS LINE
- TOP = EXISTING TOP OF SLOPE LINE
- TOE = EXISTING TOE OF SLOPE LINE
- OHW = EXISTING ORDINARY HIGH WATER LINE
- = EXISTING CHAINLINK FENCE
- = EXISTING HANDRAIL

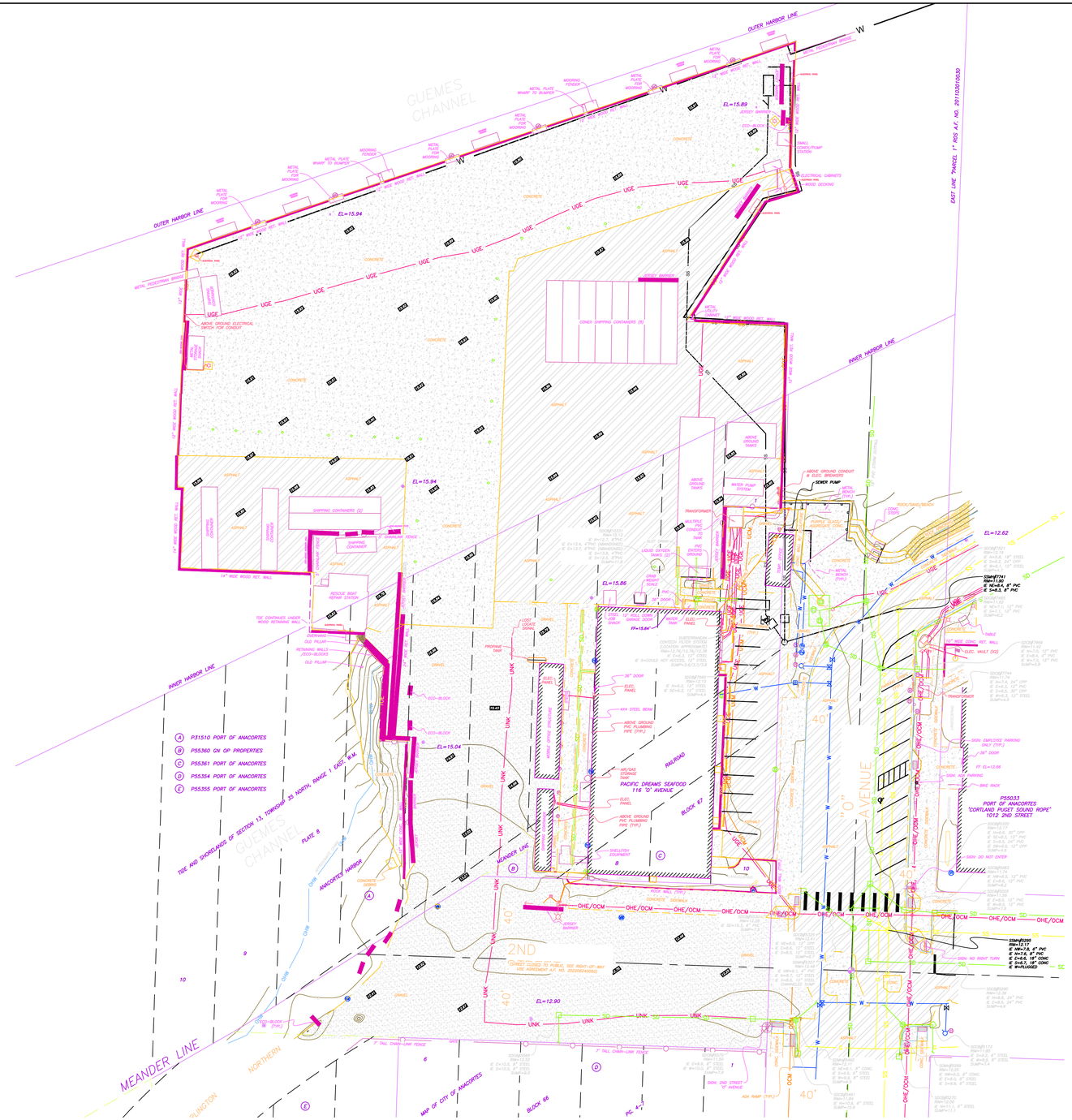


# GENERAL NOTES:

1. BASE MAP DRAWING (1996021.17_BASE) WAS OBTAINED FROM BRAD TESCH, PORT OF ANACORTES PROJECT MANAGER II, VIA EMAIL ON SEPTEMBER 10, 2024.
2. COMMERCIAL VESSEL PUMPOUT FACILITY DRAWING (1996021.17_SITE) WAS OBTAINED FROM BRAD TESCH, PORT OF ANACORTES PROJECT MANAGER II, VIA EMAIL ON SEPTEMBER 10, 2024.

## TOPO NOTES:

1) THIS TOPOGRAPHIC SURVEY WAS PERFORMED AND PREPARED IN ACCORDANCE WITH WAC 332-130-145.

2) DATA FOR THIS SURVEY WAS GATHERED BY FIELD TRAVERSE UTILIZING ELECTRONIC DATA COLLECTION IN OCTOBER AND NOVEMBER 2022 AND SEPTEMBER 2023 (WHARF).

3) EQUIPMENT USED: THEOMAT 00'01.5"
EDM: ± 2 PPM, ± 3 MM

4) HORIZONTAL DATUM: NAD 83/91 WA STATE PLANE NORTH ZONE

5) VERTICAL DATUM: MEAN LOWER LOW WATER (MLLW) ON NOAA TIDAL DATUM EPOCH 1941-1959, BASED ON PORT OF ANACORTES SURVEY CONTROL MONUMENT "JETTY-2"

TEMPORARY BENCH MARKS: PSE CONTROL ON-SITE, AS SHOWN

6) CONTOURS DEPICTED HEREON MEET OR EXCEED NATIONAL MAPPING STANDARDS FOR 1-FOOT ACCURACY TOPOGRAPHIC SURVEYS AND HAVE BEEN COMPUTER GENERATED FROM GROUND FIELD TOPOGRAPHY GATHERED FOR THIS SURVEY UTILIZING ELECTRONIC DATA COLLECTION.

7) CONDUCTIBLE UNDERGROUND UTILITY LOCATES SERVICES WERE PERFORMED AND PAINTED ON-SITE BY APPLIED PROFESSIONAL SERVICES AND SURVEYED BY PSE FIELD CREWS IN NOVEMBER 2022 AND SEPTEMBER 2023. UTILITIES ARE KNOWN TO EXIST WITHIN THE LIMITS OF THIS SURVEY THAT WERE UNDETECTABLE. ADDITIONAL UTILITY VERIFICATION MAY BE WARRANTED IN AREAS CONSIDERED FOR CONSTRUCTION.

30' 0 30' 60'
SCALE: 1"=30'

# CURTIS WHARF

Jacobs

| NO. | DATE | BY | REVISION |
|---|---|---|---|
| | | | |
| | | | |
| | | | |
| | | | |
| | | | |
| | | | |

PORT OF ANACORTES
CURTIS WHARF ELECTRIFICATION

EXISTING UTILITIES

| | |
|---|---|
| DRAWN: | PROJ NO.: W3Y20401 |
| DESIGN: | SCALE: 1"=20' |
| CHECKED: | DATE: 09/2024 |
| SHEET NO. | V-101 of 5 |

30% SUBMITTAL

Exhibit # F
Page 13 of 16

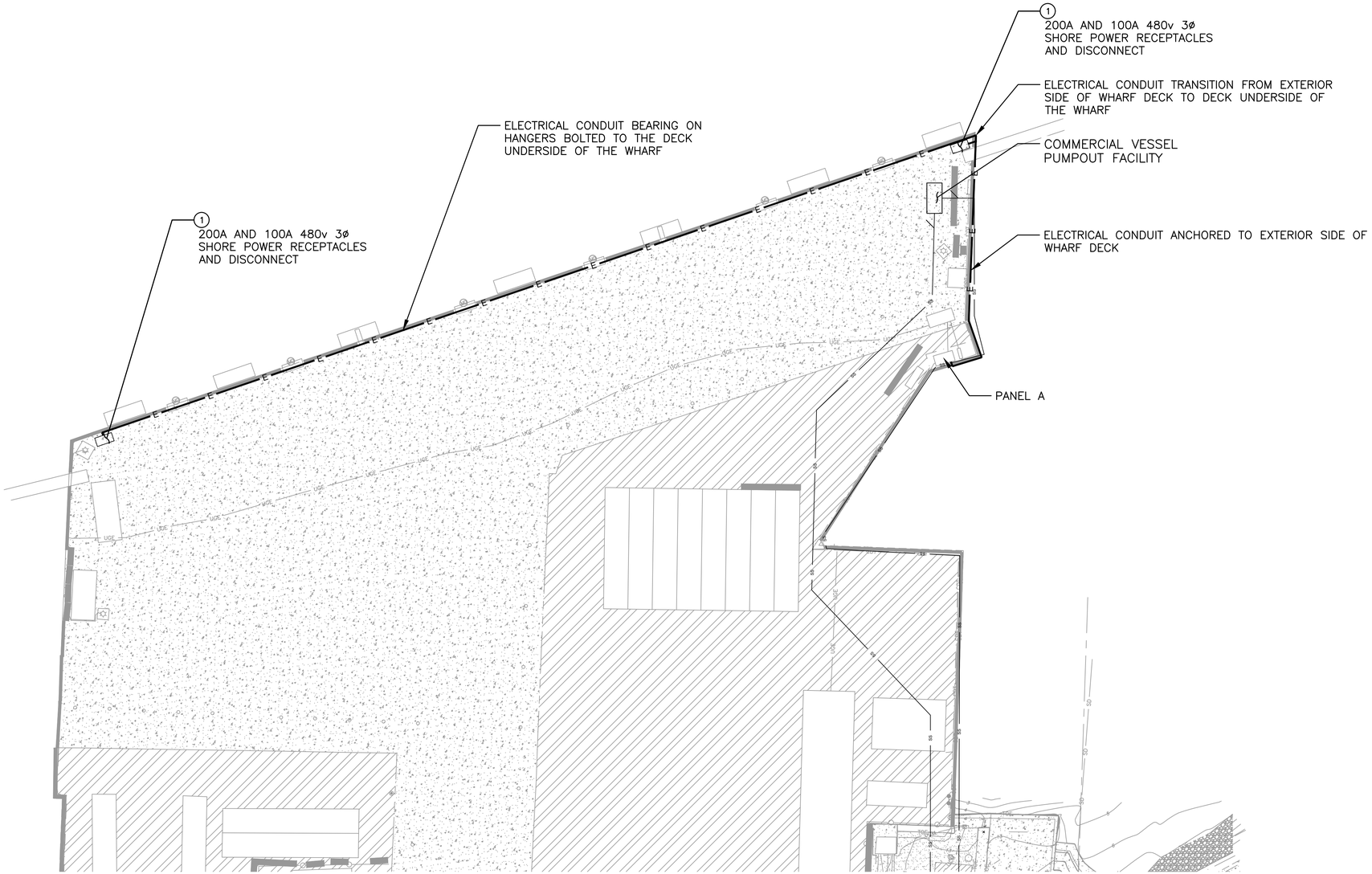


## CONSTRUCTION NOTES:

1. MOVABLE SKID TO CONNECT/DISCONNECT FROM PANEL (PROVIDED BY OTHERS).

## SITE PLAN - MOVABLE SKID AT EACH END OF WHARF

20' 0 20' 40'
SCALE: 1"=20'

Jacobs

| NO. | DATE | BY | REVISION |
|---|---|---|---|
| | | | |
| | | | |
| | | | |
| | | | |
| | | | |
| | | | |

PORT OF ANACORTES
CURTIS WHARF ELECTRIFICATION

SITE PLAN

| | |
|---|---|
| DRAWN: | PROJ NO.: W3Y20401 |
| DESIGN: | SCALE: 1"=20' |
| CHECKED: | DATE: 09/2024 |
| SHEET NO. | E-101 of 5 |

30% SUBMITTAL

Exhibit # F
Page 14 of 16

## GENERAL NOTES

1. ALL EQUIPMENT SHOWN IS EXISTING TO REMAIN UNLESS NOTED OTHERWISE.

## KEYED NOTES

1

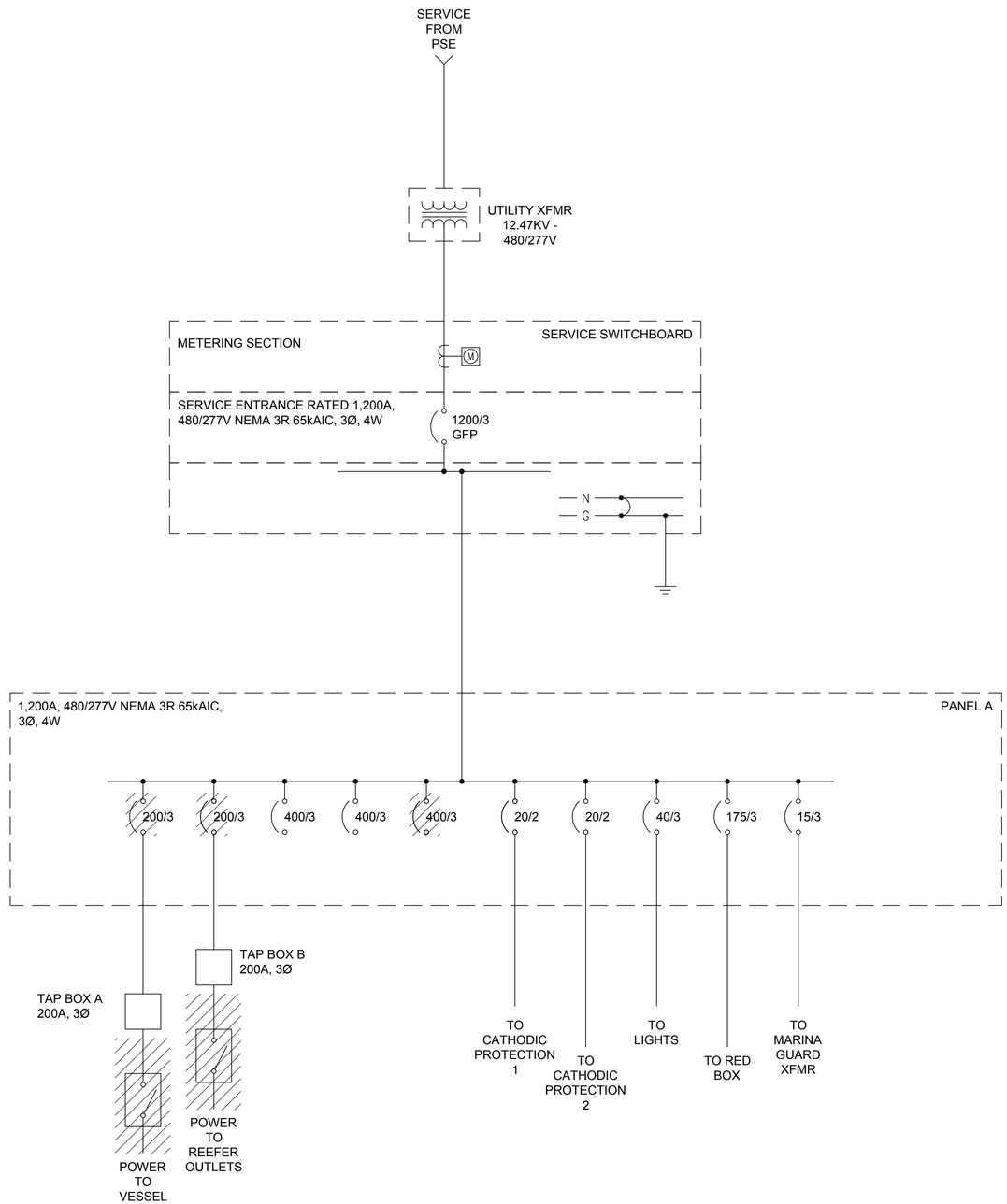


## DEMOLITION ONE-LINE DIAGRAM

SCALE: NONE


ELCON ASSOCIATES, INC.
(206) 243-5022 www.elcon.com
SEATTLE, WA LYNNWOOD, WA PORTLAND, OR


DIMITRIOS K. SIATERLIS, STATE OF WASHINGTON, 23791, REGISTERED PROFESSIONAL ENGINEER
PRELIMINARY

| NO. | DATE | BY | REVISION |
|---|---|---|---|
| | | | |
| | | | |
| | | | |
| | | | |
| | | | |
| | | | |

PORT OF ANACORTES
CURTIS WHARF ELECTRIFICATION

DEMOLITION ONE-LINE DIAGRAM

| | |
|---|---|
| DRAWN: | PROJ NO.: W3Y20401 |
| DESIGN: | SCALE: 1"=20' |
| CHECKED: | DATE: 09/2024 |
| SHEET NO. | E6.01 of 5 |

30% SUBMITTAL

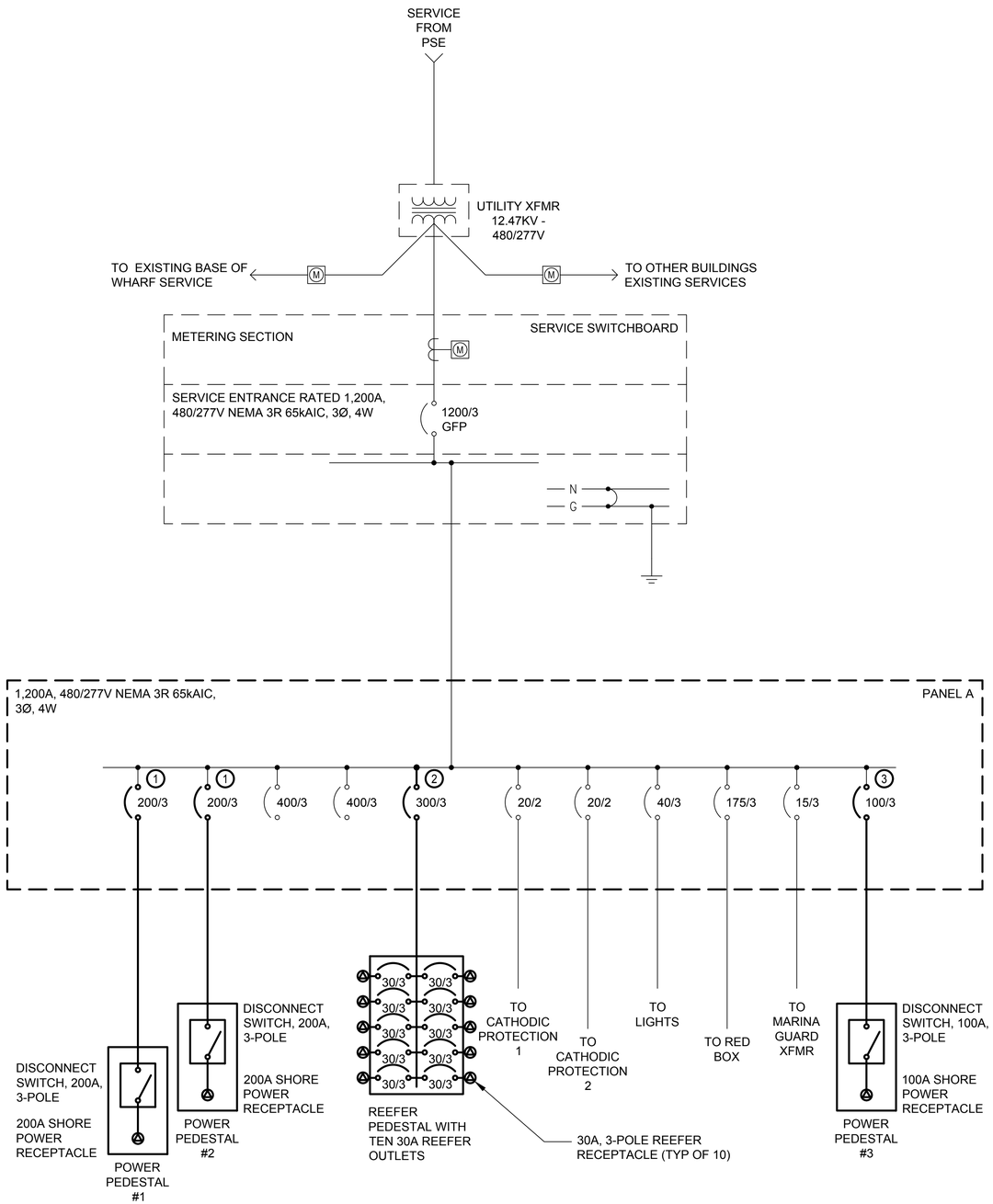


## GENERAL NOTES

1. ALL EQUIPMENT SHOWN IS EXISTING TO REMAIN UNLESS NOTED OTHERWISE.

## KEYED NOTES

1. PROVIDE NEW 200A, 480V CIRCUIT BREAKER WITH 30ma GROUND FAULT PROTECTION.
2. PROVIDE NEW 300A, 480V CIRCUIT BREAKER.
3. PROVIDE NEW 100A, 480V CIRCUIT BREAKER WITH 30ma GROUND FAULT PROTECTION.

# CONSTRUCTION ONE-LINE DIAGRAM

SCALE: NONE


ELCON ASSOCIATES, INC.
(206) 243-5022 www.elcon.com
SEATTLE, WA LYNNWOOD, WA PORTLAND, OR


DIMITRIOS K. SIATERLIS — STATE OF WASHINGTON — 23791 — REGISTERED PROFESSIONAL ENGINEER — PRELIMINARY

| NO. | DATE | BY | REVISION |
|---|---|---|---|
| | | | |

PORT OF ANACORTES
CURTIS WHARF ELECTRIFICATION

CONSTRUCTION ONE-LINE DIAGRAM

| | |
|---|---|
| DRAWN: | PROJ NO.: W3Y20401 |
| DESIGN: | SCALE: 1"=20' |
| CHECKED: | DATE: 09/2024 |
| SHEET NO. | E6.02 of 5 |

30% SUBMITTAL

City of Anacortes
Planning, Community & Economic Development Department
904 6th Street
Anacortes, WA 98221

February 4, 2025

PCED Received
Date: 02/05/2025
Document received by the Planning, Community & Economic Development Department

**Re: Port of Anacortes Curtis Wharf Pump out Facility/Electrification Project – Curtis Wharf;**
**Fish and Wildlife Habitat Conservation Areas Assessment and Report**

Dear City of Anacortes Planning Staff,

This letter is being provided for the Port of Anacortes (Port) Curtis Wharf Pump out Facility/Electrification Project to verify compliance with the critical areas code within the City of Anacortes (City) Shoreline Master Program (SMP). As part of the permitting process, the Port has prepared a No Effects Evaluation (NEE) and verification of compliance with the list of requirements as part of the National Marine Fisheries Service (NMFS) Salish Sea Nearshore Programmatic (SSNP). This process evaluated impacts to several ESA species and critical habitats and concluded that the Project would have no effects on these species and habitats.

Although the existing federal permitting documents provide a detailed analysis of the impacts of the project on the existing habitat and functions associated with ESA listed species, it does not address all the elements of the Fish and Wildlife Habitat Conservation Areas section in the City's SMP. Section 6.6 of the SMP provides general polices and regulations for the protection of unique, rare, and fragile environments from impacts associated with proposed development. These environments include wetlands and Fish and Wildlife Habitat Conservation Areas (as defined in Section 6.7 of the SMP and Appendix A – Section A-5). The purpose of this letter is to provide responses to the development regulations listed in the Fish and Wildlife Habitat Conservation Areas and critical areas regulations within Section 6.7 of the SMP that are were not covered in the NEE. Specifically, this letter will address the potential impacts of the project on specific critical saltwater habitat that is not addressed as part of the ESA consultation with the federal agencies.

Based on the existing level of disturbance and location of the proposed project (within Curtis Wharf), the only critical area that the project could potentially impact is critical saltwater habitat. Critical saltwater habitat is identified in the SMP Guidelines, WAC 173-26-221(2)(iii) and includes kelp beds, eelgrass beds, herring spawning and holding areas, smelt and sand lance spawning and holding areas, subsistence, commercial and recreational shellfish beds, mudflats, other intertidal habitats with vascular plants, juvenile salmonid migration corridors, rock sole spawning beds, rockfish settlement and nursery areas, and lingcod settlement and nursery areas. In addition, it is important to give special consideration to conservation or protection measures necessary to preserve or enhance anadromous fish stocks, such as salmon, some of which are classified as "Threatened" under the Endangered Species Act.

The proposed project will occur within an active wharf, and the entire project area has been historically developed to maintain the use of the marine terminal. As a result of the historic development and existing level of disturbance, the proposed project has negligible potential to impact critical saltwater habitat. The majority of these areas are not present within or adjacent to the project area. Each of the areas are listed below along with an assessment of whether these areas are within or adjacent to the project area. A detailed description of the existing conditions within the project area is provided in JARPA and NEE for the project.

- **Kelp beds** – There are no known kelp beds located within or adjacent to the project area. Further, all work to occur above High Tide Line (HTL). The proposed project will result in no net loss of ecological function and values associated with kelp beds.
- **Eelgrass beds** – There are no known eelgrass beds within the project area. Further, the project is entirely above the HTL and would not affect any eelgrass that may be present. The proposed project will result in no net loss of ecological function and values associated with eelgrass beds.
- **Herring spawning and holding areas** – WDFW's herring spawning map shows no herring spawning or holding areas in Guemes Channel. The nearest identified herring spawning area is located approximately 1.5 mi east of Curtis Wharf. Further, the Project has no mechanism to affect herring spawning or holding areas. As a result, the proposed project will result in no net loss of ecological function and values associated with herring spawning and holding areas.
- **Smelt and sand lance spawning and holding areas -** The shoreline survey indicated that there is no smelt or sand lance spawning and holding areas within or adjacent to the project area; however, Q'elech'ilhch Park, adjacent to Curtis Wharf, is listed as smelt spawning habitat. The proposed project will have no mechanism to impact either smelt or sand lance spawning due to the nature of the proposed work. As a result, the proposed project will result in no net loss of ecological function and values associated with smelt and sand lance spawning and holding areas.
- **Subsistence, commercial and recreational shellfish beds** – The proposed project will occur within the Curtis Wharf. There is no subsistence, commercial and recreational shellfish beds within the project area. The proposed project will result in no net loss of ecological function and values associated with subsistence, commercial and recreational shellfish beds.
- **Mudflats** – The proposed project will occur within the Curtis Wharf. The shoreline within the project area consists of a treated wood bulkhead wall and riprap shoring from the top of the bank down to around 0 ft MLLW, and a gradually sloped mudflat below 0 ft MLLW to -24 ft MLLW. Below that elevation, the habitat is muddy bottom with cobble and debris consistent with an active marina, but no mudflat is present. Further, the Project has no component that affects substrate. Therefore, proposed project will result in no net loss of ecological function and values associated with mudflats.
- **Other intertidal habitats with vascular plants** – All activities to occur above the HTL. Therefore, the proposed project will result in no net loss of ecological function and values associated with intertidal habitats with vascular plants.
- **Juvenile salmonid migration corridors** – Curtis Wharf does not provide quality juvenile salmonid migration corridors. This is due to the distance from natal rivers and the existing level of use and configuration of the marine terminal. The impacts to juvenile salmonid

migration corridors are expected to be minimal due to the lack of quality habitat at the project location that would be favorable to juvenile salmonids, as well as all activities to occur above HTL. The existing shoreline currently lacks habitat complexity and consists of a concrete treated wood bulkhead wall and rip rap shoring. Further, the Project involves only superficial changes to the existing wharf, and has no mechanism to affect migration corridors. There will be no increase in overwater coverage, so there is no expected reduction to the quality of habitat within the wharf for juvenile salmonids migrating through the wharf. Juvenile fish species migrating through the wharf are expected to utilize the shallow water portions of the shoreline, which is significantly degraded based on the existing bulkhead and riprapped slope. All activities to occur above HTL. Therefore, the proposed project will result in no net loss of ecological function and values associated with juvenile salmonid migration corridors.

- **Rock sole spawning beds** - There are no rock sole spawning beds within or adjacent to the project area. The proposed project will result in no net loss of ecological function and values associated with rock sole spawning beds.
- **Rockfish settlement and nursery areas** - There is no rockfish settlement and nursery areas within or adjacent to the project area. An assessment on ESA listed rockfish is provided in the NEE. The proposed project will result in no net loss of ecological function and values associated with rockfish settlement and nursery areas.
- **Lingcod settlement and nursery areas** - The environmental baseline condition within the project area indicated that there is no lingcod settlement and nursery areas within or adjacent to the project area. The proposed project will result in no net loss of ecological function and values associated with lingcod settlement and nursery areas.
- **Species listed as "Threatened or Endangered" under the Endangered Species Act** – The potential impacts on species listed as "threatened" under the endangered species act was analyzed in detail in the NEE. This analysis also addressed associated critical habitat for the species. The effects determination for the species and critical habitat was *no effects*. A detailed discussion of the effects of the project on "threatened or endangered" species and critical habitat are provided in the NEE.

In addition, this letter will provide responses to the development regulations within the Fish and Wildlife Habitat Conservation Areas ensuring that the proposed project meets these regulations. The regulations and responses are presented below.

***C. Development Regulations***

***DR-6.7.1.*** *- Water-dependent development and uses, including marinas, docks, piers, mooring areas, underwater parks, utility crossings, and shoreline modifications, shall not intrude into or be built over critical saltwater habitat unless the applicant can show that all of the following criteria can be met:*

a. *The use preference listing in RCW 90.58.020 for uses in Shoreline of Statewide Significance shall be adhered to.*

The proposed wharf improvements will adhere to the use preference listing in RCW 90.58.020. The list of use preferences is provided below.

*(1) Recognize and protect the statewide interest over local interest;*
Both statewide and local interests will be positively impacted by the proposed project. Curtis Wharf serves as one of the Port's primary commercial docks for loading and unloading commercial vessels. The pump out will reduce blackwater discharge in the Salish Sea. Shore power will reduce greenhouse gas (GHG) emissions, diesel emissions, in-water and near port noise by letting vessels cold-iron while they are at berth. These improvements ensure the continued safe use and operation of the marine terminal and ensure the existing use of the wharf stays within Curtis Wharf and does not relocate to another location; supporting the local and regional maritime industry. These users provide benefits throughout the northern Puget Sound by maintaining economic activity.

*(2) Preserve the natural character of the shoreline;*
The proposed project will occur within an active wharf. The existing shoreline consists of a treated wood bulkhead wall and rip rap shoring beneath the wharf, and sandy/rocky beaches on either side. The proposed project will have no impact on the existing shoreline, thus will preserve the existing character of the shoreline.

*(3) Result in long term over short term benefit;*
Curtis Wharf is currently heavily utilized for commercial use. The proposed project will increase services that the marine terminal will be able to provide vessels to ensure the continued safe use of the wharf and support future user requirements. The pump out is designed to reduce blackwater discharge in the Salish Sea by allowing vessels to discharge directly into the municipal sanitary sewer. The shore power will reduce GHG, diesel emissions, in-water and near port noise by letting vessels cold-iron when they are at berth. Without these improvements, users may be forced to relocate, resulting in additional strain on other facilities or construction of new facilities elsewhere. Upgrading existing facilities, within historically developed aquatic environments, minimizes overall regional impacts. This proposed project will result in long-term benefits as it will ensure that the existing uses are maintained, and no additional impacts occur.

*(4) Protect the resources and ecology of the shoreline;*
The proposed project will have no adverse impacts on the existing resources and ecology of the existing shoreline within the wharf. The proposed project will occur above the HTL within an active port, which provides limited resources and ecological functions. The proposed improvements will not alter the shoreline within the wharf. There are no mechanisms to impact the resources and ecology of the shoreline. The installation of shore power and a blackwater pump would result in an increase in resources and shoreline functions.

*(5) Increase public access to publicly owned areas of the shorelines;*
Curtis Wharf is located on the northwest portion of the Port of Anacortes Marine Terminal (Marine Terminal). Curtis Wharf was originally constructed in 1905, reconstructed in 1992 and extended in the late 1990s. It supports commercial marine activities at the Port. The purpose and need for the improvements would be to ensure the continued safe use of the dock while increasing services for mooring vessels. Additionally, the proposed improvements of

Curtis Wharf are required to meet the needs of current and future user groups for the marine terminal.

*(6) Increase recreational opportunities for the public in the shoreline;*
As stated above, the overarching goal of the project is to maintain existing user needs and support future user requirements. The project does not propose any change to the existing uses. Curtis Wharf has been, and will continue to be, an important and heavily used commercial wharf for the Port. It supports local commercial vessels. The proposed project will maintain the existing utilization of Curtis Wharf but will increase future opportunities by upgrading the facility to meet future needs.

b. *The public's need for such a structure is clearly demonstrated and an alternative alignment or location on the applicant's property that would avoid impacts to critical saltwater habitats is not feasible or would result in unreasonable and disproportionate cost to accomplish the same general purpose. An alternatives analysis will be required for any non–exempt project proposed within FWHCAs. The analysis should include in part, shoreline bathymetry, shoreline features at the site, and substrate composition.*

The existing wharf facility, originally constructed in 1905 as a commercial load and offload facility. The Port proposes to install two shore power pedestals and a blackwater pump with associated supporting infrastructure. The Port prepared a Basis of Design Memorandum summarizing the planning process to date and describing the various operational, design, and environmental factors that were considered while designing elements of this project. In planning and designing the project, the Port worked collaboratively with a variety of stakeholders to identify existing wharf needs and develop a more operationally functional configuration. The existing design was based on the extensive public outreach process as well as consideration for potential adverse impacts to the aquatic environment.

c. *The project is consistent with the state's interest in resource protection and species recovery.*

The proposed project has been designed so that the construction will have no effects on resources or imperiled species. Over the long-term, the Project will benefit resources as a whole by reducing the potential for blackwater discharge to Puget Sound, and by reducing emissions by ships at berth.

d. *Impacts to critical saltwater habitat functions are mitigated to result in equal or better ecological function.*

The potential impacts to specific elements of the critical saltwater habitat were described in detail above. Overall, the proposed project does not have the potential to result in a net loss of ecological functions and values. This is due to the fact that the project is entirely above the HTL and involves no in-water work, only superficial additions to the existing dock. The potential impacts of the proposed project have been avoided and minimized by nature of where the proposed project will occur. Curtis Wharf is a heavily utilized wharf and the portion of the Port where Curtis Wharf is located has been historically modified and continually maintained. The shoreline beneath Curtis Wharf consists of a bulkhead and rip rap shoring from the top of the bank to a depth of between 0

ft MLLW. The riprap transitions to a mudflat to a depth of approximately -24 ft MLLW at the waterward edge of the existing wharf. There is no eelgrass or macroalgae present on the soft bottom. Based on these factors, the proposed wharf improvements will occur within a portion of the aquatic environment that is providing a low level of habitat functions and values and fish species. As a result, fish and wildlife species are expected to avoid this portion of the Port. Overall, the proposed Curtis Wharf improvements will result in minimal impacts to the aquatic environment. The following write-up provides additional project elements to ensure no net loss of ecological functions and values.

There are no potential impacts associated with the proposed project due to the nature of the proposed activities. All work to occur above HTL, therefore, there will be no mechanism for impacts.

The existing shoreline consists of a treated wood bulkhead wall and riprap shoring. The Port basin has been dredged to a depth of -24 feet. Therefore, the proposed project will occur within a portion of the aquatic environment that is already highly altered and is providing low levels of habitat function, value, or presence of fish species. There are minimal potential adverse impacts associated with the wharf improvements due to activities occurring above HTL and will be further mitigated by the following conservation measures and BMPs:

- The Project will obtain and comply with applicable permits/approvals.
- Timing restrictions specifying that construction must occur when juvenile salmonids are absent or present in very low numbers in the adjacent water body would be strictly observed. All timing restrictions that may be established by WDFW, the USACE, NMFS, or USFWS would be strictly observed (USACE permit and HPA). Anticipated to be August 1 to February 15 (Tidal Area 9).
- Any discharge of oil, fuel or chemicals into state waters is prohibited.
- Corrective actions will be taken in the event of any discharge of oil, fuel, or chemicals into the water, including:
    - In the event of a spill, containment and cleanup efforts will begin immediately and be completed as soon as possible, taking precedence over normal work. Cleanup will include proper disposal of any spilled material and used cleanup material.
    - The cause of the spill shall be assessed, and appropriate action will be taken to prevent further incidents or environmental damage.
- Spills and/or conditions resulting in distressed or dying fish shall be reported immediately to DOE's Northwest Regional Spill Response Office at (425) 649-7000 (a 24-hour phone number). Spills of oil or hazardous materials also shall be reported immediately to the National Response Center at 1 (800) 424-8802 and the Washington Emergency Management Division at 1 (800) 258-5990 or 1 (800) OILS-911.
- The contractor will have a spill containment kit, including oil-absorbent materials, on site to be used in the event of a spill or if any oil product is observed in the water.
- Operations will be stopped temporarily if listed species are observed as injured, sick, or dead in the project area to evaluate whether additional listed species are present and to

assess whether operations may continue without further impact. NMFS law enforcement will be notified, and fish will be handled with care to ensure effective treatment or analysis of cause of death or injury.

- There are no proposed changes in use, size, layout, or footprint of Curtis Wharf.
- All construction activities will occur above the water's surface. All work would either be underneath the wharf from a small skiff or work float, around the bull rail of the wharf from a small skiff or work float, or on surface the wharf itself.
- Small hand tools such as wrenches, pliers, cutters, files, hammered tools, screwdrivers, vises, clamps, snips, shims, saws, drills, etc. will be used to complete the above-water installation work to avoid possible impacts from in-air and in-water noise.
- All equipment and materials will be carried along Curtis Wharf by hand, dock cart, or small skiff.
- Any replacement materials will be cut, treated, drilled, and shaped as much as practical off site. Any on-site carpentry work shall be conducted upland before the material is hand carry onto docks for installation.
- Contractor shall incorporate marine related best management practices when conducting the work to prevent materials and debris from entering surface waters. Construction debris will not be allowed to enter surface waters. Construction debris bibs will be installed at work areas to capture potential debris or materials.
- All removed materials from wharf will be carried upland and transported and disposed of appropriately.
- Work will be performed during day-time hours.
- Proposed work will not begin prior to obtaining all necessary local, state, and federal permits and/or approvals.
- The contractor will comply with permit conditions.

The proposed project will adhere to the conservation measures and requirements developed by NMFS to allow the project to utilize the SSNP.

***DR-6.7.2*** *- Except as a habitat improvement or restoration measure, aquatic herbicide treatments, mechanical removal of vegetation and aquatic pesticide treatments shall not be used on critical salt-water habitats.*

The proposed project will not entail aquatic herbicide treatments, mechanical removal of vegetation or aquatic pesticide treatments within critical salt-water habitats.

***DR-6.7.3*** *- Sand, gravel or other materials shall neither be added nor removed from critical salt-water habitats, except when part of an approved restoration effort or beach nourishment program or as allowed in DR-6.7.1, above.*

The proposed project will not result in the placement of any substrates within the critical saltwater habitats. No materials will be removed.

***DR-6.7.4*** *- New outfalls (including stormwater and sewer outfalls) and discharge pipes shall not be located in critical saltwater habitats or areas where outfall or discharge will adversely affect critical saltwater habitats unless the applicant can show that all of the following can be met:*

*a. There is no alternative location for the outfall or pipe.*

Not applicable--the proposed project does not entail new outfalls or changes to existing outfalls.

*b. The outfall or pipe is placed below the surface of the beach or bed of the water body.*

Not applicable--the proposed project does not entail new outfalls or changes to existing outfalls.

*c. The outfall discharges waterward of the intertidal zone.*

Not applicable--the proposed project does not entail new outfalls or changes to existing outfalls.

*d. The disturbed area will be revegetated with native plants.*

Not applicable--the proposed project does not entail new outfalls or changes to existing outfalls.

*e. The discharge point(s) on the outfall or discharge pipe is located so the discharges, including nutrients in the discharge and currents, do not adversely affect critical salt-water habitats.*

Not applicable--the proposed project does not entail new outfalls or changes to existing outfalls.

***DR-6.7.5*** *- The City shall maximize the use of existing outfalls.*

The proposed project does not entail new outfalls or changes to existing outfalls. As mentioned above, the Project involves installing a new sewer force main, to be suspended below the wharf above HTL. This operation will not result in outfall or discharge, but rather will route sewage into the municipal system. The Port will continue to enforce operational BMPs required by the Clean Marina Washington Program and the Port's policies and procedures that prevent pollution from work and activities on vessels or docks.

***DR-6.7.6*** *- In addition to requiring compliance with DR-6.5.9 for certain types of developments and uses (e.g., minimum ten-foot wide planting bed(s) of riparian vegetation along marine shorelines), the City shall require the establishment of buffer areas for activities adjacent to fish and wildlife habitat conservation areas on a case by case basis through a critical area report when needed to protect such habitat conservation areas, pursuant to Section A-5.3(G)(1) of the shoreline specific Critical Areas Regulations contained in Appendix A. In order to determine the need or extent of a buffer, a critical area report shall be required for all development in or adjacent to a habitat conservation area (see also DR-6.7.7).*

The Curtis Wharf improvements will occur within the Marine Terminal. The shoreline consists of a treated wood bulkhead wall and rip rap shoring with no vegetation. The entire shoreline above the top of the bank consists of concrete sidewalks and asphalt. There is no riparian vegetation or habitat within the project area. The proposed project does not have the potential to negatively impact the existing habitat conservation areas. As a result, the proposed project does not entail the development of a buffer adjacent to the fish and wildlife habitat conservation areas.

***DR-6.7.7*** *- Until an inventory of critical saltwater habitat is done, prior to construction all over water and near-shore developments shall conduct an inventory of site and adjacent beach sections to assess the presence of critical saltwater habitats and functions. The methods and extent of inventory shall be consistent with accepted research methodology. New studies shall be developed only where existing information is inadequate or does not exist.*

This project entails affixing pipes and conduits to an existing wharf. No new development that would result in new impacts to saltwater habitat is proposed. Therefore, no habitat inventory has been conducted. The presence and potential impacts of the proposed project on critical saltwater habitats and functions is discussed above. Overall, there are few critical saltwater habitats and functions within the project areas, and the proposed project will result in no net loss of habitat functions and values. This is based on the low quality of habitat and high level of existing disturbance within the marina.

If you have any questions, please contact Jay Dirkse, at (509) 640-3289 or jayd@gretteassociates.com.

Sincerely,
**Farallon Consulting, LLC dba Grette Associates**

Jay Dirkse
Senior Scientist

PCED Received
Date: 02/05/2025
Document received by the Planning, Community & Economic Development Department

# PORT OF ANACORTES – CURTIS WHARF PUMP OUT FACILITY/ELECTRIFICATION PROJECT

# NO EFFECTS EVALUATION

PREPARED FOR:

**PORT OF ANACORTES**
100 COMMERCIAL AVENUE
ANACORTES, WA 98221

PREPARED BY:

**GRETTE ASSOCIATES,** A DIVISION OF FARALLON CONSULTING
151 SOUTH WORTHEN, SUITE 101
WENATCHEE, WASHINGTON 98801
(509) 663-6300

2709 Jahn Ave NW, STE H5
GIG HARBOR, WASHINGTON 98335
(253) 573-9300

FEBRUARY 2025

Exhibit # H
Page 1 of 44

## TABLE OF CONTENTS


1. INTRODUCTION ..... 3

2. DESCRIPTION OF THE PROJECT ..... 5
   - 2.1 Background ..... 5
   - 2.2 Proposed Project ..... 5
   - 2.3 Purpose and Need ..... 6
   - 2.4 Construction Methods ..... 7
   - 2.5 Construction Timing ..... 7

3. DESCRIPTION OF THE PROJECT AREA AND ACTION AREA ..... 8
   - 3.1 Habitat Zones ..... 8
   - 3.2 Project Area ..... 8
   - 3.3 Action Area ..... 8
   - 3.4 Environmental Baseline Conditions ..... 8

4. DESCRIPTION OF THE SPECIES AND CRITICAL HABITAT ..... 10
   - 4.1 Listed Species ..... 10
     - 4.1.1 Puget Sound Chinook Salmon ..... 10
     - 4.1.2 Puget Sound Steelhead Trout ..... 10
     - 4.1.3 Coastal-Puget Sound Bull Trout ..... 11
     - 4.1.4 Bocaccio ..... 11
     - 4.1.5 Yelloweye Rockfish ..... 12
     - 4.1.6 Southern Resident Killer Whale ..... 13
     - 4.1.7 Humpback Whale ..... 13
     - 4.1.8 Marbled Murrelet ..... 14
   - 4.2 Designated Critical Habitats ..... 14
     - 4.2.1 Puget Sound Chinook Salmon Critical Habitat ..... 14
     - 4.2.2 Southern Resident Killer Whale Critical Habitat ..... 15
     - 4.2.3 Rockfish Critical Habitat ..... 15

5. EFFECTS OF THE PROJECT ..... 16
   - 5.1 Construction ..... 16
   - 5.2 Effects on Salmonids ..... 16
     - 5.2.1 Potential Water Quality Impacts from Spills ..... 16
   - 5.3 Effects on Rockfish ..... 17
   - 5.4 Effects on Southern Resident Killer Whale and Humpback Whale ..... 17
     - 5.4.1 Sound Disturbance Pathway ..... 18
     - 5.4.2 Physical Disturbance Pathway ..... 18
     - 5.4.3 Prey Quantities ..... 18
     - 5.4.4 Contaminants/Prey Quality ..... 18
   - 5.5 Effects on Marbled Murrelet ..... 18
   - 5.6 Interrelated and Interdependent Actions ..... 19
   - 5.7 Cumulative Effects ..... 19

6. EFFECTS ON CRITICAL HABITAT ..... 20

6.1 Puget Sound Chinook Salmon Critical Habitat ....20
6.1.1 Primary Constituent Element # 5: Nearshore Areas ....20
6.2 Effects on Proposed Rockfish Critical Habitat ....21
6.2.1 Essential Feature #1: Prey ....22
6.2.2 Essential Feature #2: Water Quality ....22
6.3 Effects on Southern Resident Killer Whale Critical Habitat ....22
6.3.1 Primary Constituent Element #1: Water Quality ....22
6.3.2 Primary Constituent Element #2: Prey Quantity, Quality, and Availability ....23
6.3.3 Primary Constituent Element #3: Passage Conditions ....23

7. REGULATORY CONSIDERATION AND AVOIDANCE AND MINIMIZATION MEASURES ....24
7.1 General Avoidance and Minimization Measures: ....24

8. CONCLUSIONS AND DETERMINATIONS ....26
8.1 Listed Species ....26
8.1.1 Puget Sound Chinook Salmon, Coastal-Puget Sound Bull Trout and Puget Sound Steelhead Trout ....26
8.1.2 Bocaccio and Yelloweye Rockfish ....26
8.1.3 Marbled Murrelet ....26
8.1.4 Southern Resident Killer Whale and Humpback Whale ....26
8.2 Designated Critical Habitats ....26
8.2.1 Puget Sound Chinook Salmon Critical Habitat ....26
8.2.2 Southern Resident Killer Whale Critical Habitat ....27
8.2.3 Rockfish Critical Habitat ....27

9. REFERENCES CITED ....28

## LIST OF TABLES

Table 1. Summary of ESA species and critical habitats (CH) with corresponding effect determinations. ....4

## APPENDICES

Appendix A. Essential Fish Habitat Assessment

# 1. INTRODUCTION

The Port of Anacortes (Port) proposes building a blackwater pump out station and install shore power at Curtis Wharf, within the City of Anacortes, Washington. Curtis Wharf is located on the NW corner of the Port's Marine Terminal along Guemes Channel, in Section 13, Township 35N, Range 1 East Willamette Meridian (Appendix B, Page 1).

The Port is applying for a U.S. Army Corps of Engineers (Corps) Section 10 permit. The Endangered Species Act (ESA) requires federal agencies to ensure that they do not authorize, fund, or carry out actions that are likely to jeopardize the continued existence of endangered or threatened species or result in the destruction or adverse modification of critical habitat for such species. This No Effects Evaluation addresses the potential effects of the proposed Project on the listed species and designated critical habitats summarized in Table 1 (USFWS 2013; NOAA 2013a) and has been prepared to assist the Corps in its review of the permit application. In addition, an evaluation of the effects of the proposed Project on Essential Fish Habitat (EFH) has been prepared pursuant to the Magnuson-Stevens Fishery Conservation and Management Act and the 1996 Sustainable Fisheries Act. The effects of the proposed Project on EFH are addressed in Appendix A.

Three salmonid species that are listed under the ESA may be present in the vicinity of the Project site: Puget Sound Chinook salmon (*Oncorhynchus tshawytscha*), Coastal-Puget Sound bull trout (*Salvelinus confluentus*), and Puget Sound steelhead trout (*O. mykiss*). Additionally, two rockfish species present in Puget Sound are listed under the ESA, though their presence in Curtis Wharf is unlikely: bocaccio (*Sebastes paucispinis*) and yelloweye rockfish (*S. ruberrimus*). Canary rockfish (*S. pinniger*) was listed as threatened in 2010 but delisted in 2017. Marbled murrelet (*Brachyramphus marmoratus*), an ESA-listed bird species, is potentially present in Fidalgo Bay but unlikely to use Curtis Wharf. Additional listed species in the vicinity that are extremely unlikely to occur in the vicinity of the Project site include Southern Resident killer whale (*Orcinus orca*), humpback whale (*Megaptera novaeangliae*), and leatherback sea turtle (*Dermochelys coriacea*).

Critical habitat within the Action Area has been designated for Puget Sound Chinook salmon, Southern Resident killer whale, and bocaccio. Critical habitat has been designated for marbled murrelet (USFWS 1996) within Skagit County but not on Fidalgo Island; therefore, critical habitat for this species is not addressed within this memo.

**Table 1. Summary of ESA species and critical habitats (CH) with corresponding effect determinations.**

| Listed Species | Federal Status | Species Effects Determinations | Designated CH in Action Area | CH Effects Determinations |
|---|---|---|---|---|
| Puget Sound Chinook Salmon (*Oncorhynchus tshawytscha*) | threatened | No effect | Yes | No Effect |
| Coastal-Puget Sound Bull Trout (*Salvelinus confluentus*) | threatened | No effect | No | n/a |
| Puget Sound Steelhead Trout (*Oncorhynchus mykiss*) | threatened | No effect | No | n/a |
| Bocaccio (*Sebastes paucispinis*) | endangered | No effect | Yes | No Effect |
| Yelloweye rockfish (*Sebastes ruberrimus*) | threatened | No effect | No | n/a |
| Southern Resident Killer Whale (*Orcinus orca*) | endangered | No effect | Yes | No Effect |
| Humpback Whale (*Megaptera novaeangliae*) | endangered | No effect | No | n/a |
| Leatherback Sea Turtle (*Dermochelys coriacea*) | endangered | No effect | No | n/a |
| Marbled Murrelet (*Brachyramphus marmoratus*) | threatened | No effect | No | n/a |

# 2. DESCRIPTION OF THE PROJECT

## 2.1 BACKGROUND

The Port proposes to improve amenities at Curtis Wharf on the Guemes Channel to lessen the environmental burden of the operation of the facility. Curtis Wharf is a 63,000 sq ft overwater wharf, with associated uplands, that was originally constructed in 1905, reconstructed in 1992 and extended in the late 1990s located in Anacortes, Washington (Township 35N, Range 1 East, Section 13).

Curtis Wharf is a heavily used commercial pier at the Port's Marine Terminal. Curtis Wharf supports commercial vessels and water dependent uses. Currently, vessels calling at Curtis Wharf consist of tugboats, large fishing vessels, oil spill response vessels, and inland waterway cruise ships. Curtis Wharf is used as a lay berth for minor maintenance, fueling, watering, fitting out, and crew changes. Cruise ships disembark passengers for tours and excursions. Curtis Wharf also houses a seafood wholesaler and processor specializing in live and cooked crab. The adjacent Q'elech'ilhch Park, a public park in the Anacortes Parks system, is the only neighboring property that doesn't support a port-related use. Q'elech'ilhch Park is named after the village that Samish citizens created on these shores and remains an important cultural and public access point for the water.

## 2.2 PROPOSED PROJECT

The proposed work includes two components: installation of a commercial vessel pump out and installation of a mobile shore power skid for harbor craft. The installation of a vessel pump out ensures vessels comply with local no discharge zones and the new shore power will allow vessels to reduce their use of diesel-powered generators while at berth. These two separate project components will likely be installed concurrently at Curtis Wharf.

***Commercial Pump Out:***
The proposed vessel sewage collection design includes mounting a peristaltic pump to the northeast corner of Curtis Wharf with an adjacent bypass force main connection for vessels with internal sewage ejection pumps. The pump will be installed inside a heated enclosure with an integrated hose rack. Basic red/green activation controls will be located on the exterior of the enclosure for operating the pump. Backflow preventors will be installed downstream of the pump and downstream of the bypass force main connection. An integrated hose rack will be provided including various adaptor fittings for use connecting the vessel equipment with the pumping system or bypass line. Vessels without internal sewage ejection pumps will utilize an integrated hose for connecting to the peristaltic pump. Vessels with internal sewage ejection pumps will utilize the hose associated with their system to connect to the force main bypass connection (using adaptor fittings as needed).

The force main will be suspended below the wharf by utility brackets, transitioning to buried piping where the wharf meets land. The force main piping below the wharf would gradually slope towards land and vented to allow the system to drain residual sewage freely into the sanitary sewer between uses removing the need for frost protection. The force main length is short enough that the

peristaltic pump's design capacity is capable of conveying vessel sewage directly to the existing City sanitary sewer manhole in O Avenue/Railroad Avenue.

The maximum discharge rate of the pump out facility will be limited to approximately 50 gallons per minute (gpm) with the integrated peristaltic pump and 250 gpm from internal vessel ejector pumps. These are provisional flow rates and will be subject to change during design and permitting. Anticipated maximum usage is one vessel daily with a typical blackwater tank volume of approximately 1,000 gallons. There may be occasional users with larger volumes to discharge, but these are not anticipated to be routine.

***Shore Power Pedestals:***
To improve electric service for vessels calling at Curtis Wharf (to allow for shore power rather than reliance on a vessel's diesel generators) a provision of 200-amp, 480 volt, 3-phase pedestals is needed. There is sufficient electrical service at the site for this level of shore power. The existing service switchboard and panelboard will be reused for these loads; however, several breakers will need to be replaced or updated at the panel. The scope of this portion of the project includes a mobile shore power system to be installed at two berth positions at Curtis Wharf and provide cold-ironing power to multiple types of vessels, such as tractor tugs, articulated tug barge combos, or fishing vessels. For increased use flexibility of the pier, the shore power pedestals will be mounted on skids for easy relocation. This system considers maximum utilization of the existing electrical system and capacity at the site and includes multiple connector types, as well as a metering system. Currently, the Port has not finalized a location for the skid pedestals but anticipates installing two pedestals on the face of Curtis Wharf. These will be mounted on a skid and easily moved by forklift. The conduit run will be undermounted or routed along the bullrails using appropriate armored conduit for marine use. The final route and length of conduit will be determined during final design.

The shore power pedestals will allow vessels to cold iron their onboard engines and auxiliary generators while at berth by connecting to the shore-based electrical grid. This is beneficial for several reasons: it reduces emissions and noise and allows for less down time for equipment maintenance and reduces fuel costs for vessels. As part of the project, the Port will track greenhouse gas (GHG) offsets from the operations of the shore power at Curtis Wharf and report these to the Department of Ecology and Washington State Department of Transportation. The final form of the skid-based system will be determined by a combination of cost, function, and availability.

## 2.3 PURPOSE AND NEED

These improvements will ensure the continued safe commercial use of the wharf and ensure that the Port can continue to provide the existing services to the tenants. Specifically, these improvements will reduce blackwater discharge into the Salish Sea and reduce GHG, diesel emissions, in-water and near port noise by letting vessels cold-iron when they are at berth. The existing concrete decking and pier structure and pilings are still in good condition and no maintenance on these large structures are proposed or planned.

## 2.4 CONSTRUCTION METHODS

All work will be completed using hand-held equipment. Hand-held tools will include wrenches, pliers, cutters, files, hammered tools, screwdrivers, vises, clamps, snips, shims, saws, and drills. All the work will be completed from either on top of the existing wharf or from a small work skiff or work float. The size of the skiff or float will be small enough to operate underneath the wharf. The vessels or work float will be delivered to the site from the existing launch in Guemes Channel or the hoist within Cap Sante Marina. All materials and tools will either be delivered to the site in the vessel or from the upland (by hand, dock carts, etc.). Likewise, all materials removed will be moved to the uplands along the docks by hand, dock cart, or skiff. All removed material will be loaded into a truck and disposed of at an appropriate upland facility.

## 2.5 CONSTRUCTION TIMING

The proposed project would occur upon receipt of permits and would take a matter of weeks. The Port anticipates commencing Curtis Wharf improvements in 2025. Work on the top of the deck would not be subject to work window restrictions. The work will occur within the approved work windows, which is anticipated to be July 16 to February 15 (Tidal Area 9).

# 3. DESCRIPTION OF THE PROJECT AREA AND ACTION AREA

## 3.1 HABITAT ZONES

For the purposes of this memo, intertidal habitat is defined as aquatic habitat located from High Tide Line (HTL; approximately +9.5 ft MLLW) to –4 ft MLLW. Shallow subtidal habitat is located between –4 ft MLLW and –10 ft MLLW. The intertidal/shallow subtidal habitat is considered the most important in the early life history of salmonids. Subtidal habitat includes all bottom areas deeper than –10 ft MLLW.

## 3.2 PROJECT AREA

The "Project Area" includes all locations where construction activities would occur as part of the Project. The Project Area encompasses the footprint of the existing wharf. In total, the Project Area for this project encompasses approximately 63,000 square feet. The Project Area is a conservative estimate that includes the footprint of the existing wharf where improvements are planned and all areas where construction equipment may be operated in a 15-foot halo around these areas.

## 3.3 ACTION AREA

The effects of the Project are described within a broader setting than the Project Area (the location where construction would occur) to provide context for evaluating the impacts of the Project. This broader area, termed the "Action Area," encompasses the Project Area as well as all areas that may be directly or indirectly affected by proposed Project activities.

The boundaries of the Action Area were determined by considering the potential geographic reach of mechanisms that may lead to impact on the species of concern. For this Project, the primary mechanism that may lead to impacts on species of concern is materials entering the water. The Action Area is identical to the Project Area due to the project's limited area of potential impacts.

## 3.4 ENVIRONMENTAL BASELINE CONDITIONS

The extent of the Project Area and Action Area are the same, so the description of the existing environmental baseline conditions will occur together. Much of the uplands surrounding Curtis Wharf are heavily developed. The southern portion of the uplands of the wharf consists of a treated wood bulkhead wall and riprap shoring from the bank down to around 0 ft Mean Lower Low Water (MLLW), and a gradually sloped mudflat below 0 ft MLLW to -24 ft MLLW. Within this developed portion of the wharf, the top of the bank is located between 5-10 ft above the MHHW. Above the top of the bank the uplands are dominated by concrete sidewalks, paved parking areas, asphalt roads, and commercial and Port buildings. Overall, the entire southern upland portion of Curtis Wharf is developed and utilized for port activities and operations and transportation. Above the MHHW, the shoreline slope is moderate. The wharf's shoreline is stabilized in its entirety

Due to the nature of the proposed project and the minimal area of potential impacts, the Action Area encompasses the footprint of Curtis Wharf and an approximate 15 ft halo around each portion of the wharf targeted for installation of pump and shore power pedestals. Most of the shoreline within the wharf is heavily developed and consists of a treated wood bulkhead and riprap shoring.

The riprap extends from the top of the bank down to around 0 ft MLLW, and gradually sloped mudflat below 0 ft MLLW to -24 ft MLLW.

Surf smelt (*Hypomesus*), sand lance (*Ammocytes hexapterus*) and Pacific herring (*Clupea harengus pallasi*) are important forage fish for salmonids. Surf smelt require high intertidal beaches with gravel size 1-7 mm for spawning. Sand lance also require upper intertidal spawning habitat, with sandy gravel beaches. Surf smelt spawning has been mapped occurring adjacent to Curtis Wharf. Q'elech'ilhch Park, just west of the wharf, is the area in the immediate vicinity of Curtis Wharf with mapped spawning locations. However, this area is located outside of the proposed Action Area for this project. Surf smelt spawning activity occurs on this beach from May to September, unlike adjacent spawning beaches across Fidalgo Bay, which receive smelt spawn virtually year-round. The nearest known sand lance spawning beach is in the southern portion of Fidalgo Bay over 3.5 miles from the Action Area (WDFW 2013). No herring spawning occurs in the Action Area.

The Samish River, which is the closest freshwater system, enters Samish Bay approximately 7 miles northeast of the Action Area. Fish species found in the Samish River include chinook and coho salmon. The Skagit River enters the Skagit Bay approximately 13 miles south of the Action Area. Many species of fish use the Skagit River, including chinook and coho salmon and bull trout. In addition, the Nooksack River enters Bellingham Bay approximately 17 miles north of the Action Area. Fish from this river, including chinook, coho and bull trout, could also occur in the Action Area as indicated by recapture data presented by Stober and Salo (1973).

# 4. DESCRIPTION OF THE SPECIES AND CRITICAL HABITAT

The listed species associated with the Action Area are Puget Sound Chinook salmon, Coastal-Puget Sound bull trout, Puget Sound steelhead trout, bocaccio, yelloweye rockfish, Southern Resident killer whale, humpback whale, and marbled murrelet. Per recent conversations with the Corps, National Oceanic and Atmospheric Administration (NOAA) Fisheries, and U.S. Fish and Wildlife Service (USFWS), this section is reduced to a list of references that describe the life history of the species and a description of how the species may utilize the Action Area. Designated critical habitat that is associated with the Action Area includes that for Puget Sound chinook salmon and Southern Resident killer whale. Proposed critical habitat is present for bocaccio. The geographic distribution and boundaries of critical habitat areas as well as the extent of the Project Area within these critical habitats is discussed below.

## 4.1 LISTED SPECIES

### 4.1.1 Puget Sound Chinook Salmon

On March 24, 1999, the NOAA's National Marine Fisheries Service (NMFS) formalized listing of Puget Sound Chinook salmon as threatened under the ESA (NOAA 1999). This species occurs throughout Puget Sound, and its presence has been documented within Indian Slough, the North Fork of the Skagit River, the Samish River, and the Nooksack River, 7, 13, 13, and 17 miles to the east of the Action Area, respectively (WDFW 2013). Although no chinook spawning has been documented on Fidalgo Island (WDFW 2013), juvenile chinook out-migrating from the Skagit County basin migrate and rear along the nearshore environment of Fidalgo Bay, including the Action Area (NMFS 2007). Peak abundances of juveniles are expected to occur between April and June as they migrate seaward (City of Anacortes 1999). Small numbers of chinook juveniles of both wild and hatchery origin were caught by beach seine within Guemes Channel during May and July of 2001 (Port of Anacortes 2004). Additionally, three years of tow-net surveys in North Puget Sound recorded juvenile chinook presence in Padilla Bay during June through August, and in Guemes Channel during July through September (Miller et al. 1977). Within Curtis Wharf, Chinook salmon of any life history stage are unlikely to be present in appreciable numbers.

General life history and stock information on chinook in the vicinity of the Action Area can be found in the following references: Tyler 1964; Tyler and Bevan 1964; Wetherall 1971; Stober and Salo 1973; Weitkamp and Campbell 1980; Congleton et al. 1982; Weitkamp and Schadt 1982; Duker et al. 1989; Healey 1991; NMFS 1998.

### 4.1.2 Puget Sound Steelhead Trout

Puget Sound steelhead trout were listed as threatened by the NMFS on May 11, 2007 (NOAA 2007). A number of small runs comprise the mainland Skagit County population of Puget Sound steelhead. Native wild steelhead are present in the North Fork of the Skagit River and the Samish River, each 12 miles to the southeast and northeast, respectively (WDFW 2013). Wild steelhead are also present in the Nooksack River, about 18 miles from the Project Area.

Summer steelhead runs occur in both the Skagit and Nooksack Rivers. The Skagit River is a very productive steelhead stream. According to WDFW's SalmonScape (WDFW 2013), summer steelhead spawning occurs in the upper reaches of the river system, in small tributaries such as the

Cascade and Sauk Rivers. In the Nooksack River, summer steelhead spawning occurs in the upper portion of the mainstem.

Winter steelhead are also present in both rivers, as well as the Samish River and several smaller creeks including Chuckanut Creek, Padden Creek, Whatcom Creek, and Squalicum Creek in Bellingham Bay. According to WDFW's SalmonScape (WDFW 2013), in the Skagit and Nooksack Rivers, winter steelhead spawning occurs throughout much of the mainstem(s) as well as several smaller tributaries. Spawning also occurs in the Samish River, and Chuckanut, Whatcom, and Squalicum Creeks.

Any juvenile steelhead present in Fidalgo Bay would likely overlap temporally with chinook and other ocean-type salmon but are much less likely to rely on shallow water rearing due to their larger size. Further, it is unlikely that steelhead trout of any life history stage would be present in the waters near Curtis Wharf in appreciable numbers. Juvenile rearing likely occurs in shallow waters of Fidalgo Bay but not likely at Curtis Wharf. Sub-adult and adult steelhead may use the deeper, offshore waters of Fidalgo Bay and Guemes Channel, but are not expected to be present in significant numbers at any time.

General life history information for Puget Sound steelhead trout has been reviewed in the Final Listing Determination (NOAA 2007) and the Status Review Update for Puget Sound Steelhead (NMFS 2005). Information relating to habitat usage by steelhead trout has been solicited by the NOAA, but the critical habitat listing for this species has not yet been proposed.

### 4.1.3 Coastal-Puget Sound Bull Trout

The USFWS announced the listing of Coastal-Puget Sound bull trout as threatened on November 1, 1999 (USFWS 1999). Anadromous bull trout are known to be present in the Skagit, Samish, and Nooksack Rivers approximately 12, 12, and 17 miles, respectively, from the Project Area (WDFW 2008). Because anadromous bull trout may range in salt water as much as 30 or 40 kilometers (approximately 18 to 25 miles) from the mouth of their natal stream (Kraemer 1994), it is assumed that they are present in Fidalgo Bay and may be present in the Action Area. A 210 mm bull trout was observed during Port of Anacortes' monitoring of the O Avenue Mitigation Site on Guemes Channel (Port of Anacortes 2012). Though sub-adult and adult bull trout may be present in Fidalgo Bay or Guemes Channel year-round, they are not expected to be present at Curtis Wharf at any time.

Life history and stock information on Coastal-Puget Sound bull trout potentially occurring in the Action Area can be found in the following references: Rieman and McIntyre (1993; 1995); Bonneau and Scarnechia (1996); Buchanan and Gregory (1997); Lee et al. (1997); USFWS (1999); USACE (2000).

### 4.1.4 Bocaccio

Bocaccio were listed as endangered under the ESA on April 28, 2010 (NOAA 2010). Critical habitat was proposed on August 6, 2013.

Bocaccio rockfish are a large rockfish, often reaching up to three feet in length. Bocaccio rockfish, like other rockfish species, give birth to live larval young that are pelagic for several months.

Juvenile bocaccio rockfish then settle into nearshore habitat within 3-6 months, often including aquatic vegetation such as macroalgae-covered rocks or sand/eelgrass habitat (Love et al. 2002). Juveniles typically inhabit shallower water than adults, though they are most common in relatively deep waters (100-400 ft [COSEWIC 2002]). Bocaccio rockfish and most rockfish species migrate to deeper water as they mature (Love et al. 1991), and adult bocaccio rockfish are usually found at depths of between 165 ft and 825 ft (Love et al. 2002). Adults often congregate around rocky bottom and outcrop habitat, though occasionally wander into mudflats (NMFS 2008). Adults are typically found well off the bottom (Love et al. 2002). Juvenile bocaccio rockfish are planktivorous, feeding on larval krill, diatoms, and dinoflagellates. Adults are piscivorous, primarily feeding on other rockfishes, hake sablefish, anchovies, lanternfish, and squid (NMFS 2008). Bocaccio rockfish are prey of chinook salmon, terns, and harbor seals (NMFS 2008).

Bocaccio have not been documented in Puget Sound since 2001, although it is assumed an extant population exists (NMFS 2008). Historically, bocaccio was more frequently observed as bycatch or in the recreational fisheries in the southern portion of Puget Sound, including the area around Point Defiance and the Tacoma Narrows (NOAA 2009, NMFS 2008, and Palsson et al. 2009). WDFW includes bocaccio on its priority habitat and species (PHS) list but does not show them as present in Skagit County (WDFW 2012).

The aquatic habitat within the Project Area is shallower than typical bocaccio habitat. Larval and juvenile rockfish could be present in the Action Area, though it does not contain rearing habitat that they prefer. No rocky shoreline areas are present in the Action Area. Very little eelgrass is present in the vicinity of the Action Area, which may be utilized by juveniles for rearing. Adults almost certainly do not use the Project Area due to the shallow water. Based on the available information, it is unlikely that bocaccio would be present in the Action Area.

### 4.1.5 Yelloweye Rockfish

Yelloweye rockfish were listed as threatened under the ESA on April 28, 2010 (NOAA 2010).

Yelloweye rockfish, one of the larger rockfish, are generally considered rare in Puget Sound (Love et al. in NMFS 2008). Like other rockfish, yelloweye rockfish give birth to live larval young that are pelagic for several months. Juvenile yelloweye rockfish generally settle in deeper habitats than bocaccio and canary rockfish juveniles (Love et al. in NMFS 2013). Juveniles typically inhabit deep waters within the upper range of adults (NOAA 2013c). Adults generally inhabit water between approximately 40 and 1,560 ft deep but are most common between 300 and 600 ft (Love et al. 2001). Adult yelloweye rockfish are generally attached to a specific site and do not move much from that site (NMFS 2008). Adult yelloweye rockfish were observed in association with coral reefs at depths between approximately 650 and 820 ft in the Olympic Marine Sanctuary off the Washington Coast during coral surveys (Brancato et al. 2007). Juvenile yelloweye rockfish are planktivorous. Adults, due to their large size, prey on a wider range of prey items than bocaccio rockfish or canary rockfish, including smaller rockfish, sand lance, gadids, flatfishes, shrimp, crab, and gastropods (Love et al. 2002 and Yamanaka et al. 2006 in NMFS 2008). Yelloweye rockfish are preyed on less frequently than most rockfish due to their size, though they are occasionally preyed upon by killer whales.

The Action Area is even less likely to be used by yelloweye rockfish than the other two rockfish species due to yelloweye juveniles' preference for deeper waters. Further, the aquatic habitat within the Action Area is not typical yelloweye rockfish habitat, as the site does not include rocky reefs or outcrops. In general, yelloweye rock fish have been observed more frequently in north Puget Sound than in the southern areas (Miller and Borton 1980). WDFW includes yelloweye rockfish on its PHS list but does not show them as present in Skagit County (WDFW 2012). Based on the available information, it is extremely unlikely that yelloweye rockfish would be present in the Action Area.

### 4.1.6 Southern Resident Killer Whale

The NMFS announced the listing of the North Pacific Southern Resident killer whale as an endangered species on November 18, 2005, effective February 6, 2006 (NOAA 2005a). The listing is specific to the three resident whale pods (J, K, and L pods) with spring through fall ranges in Puget Sound and the Straits of Georgia and Juan de Fuca. Several factors have been identified by NOAA Fisheries as having resulted in the listing of these whales as endangered. Sound and disturbance from vessel traffic, toxic chemicals which accumulate in top predators, and uncertain prey availability (primarily salmon) all have been identified as concerns for the continued survival of this population.

Southern Resident killer whales are often sighted in the western portion of Guemes Channel adjacent to Rosario Strait but do not regularly use Fidalgo Bay or Padilla Bay. Based on sightings information maintained by The Whale Museum, there is one historic sighting of a killer whale in Fidalgo Bay in 1997 (ecotype unreported), and one sighting of the J-pod southeast of Guemes Island (Osborne 2007). However, based on the few sightings in and around Fidalgo Bay, Southern Resident killer whales do not use Fidalgo Bay. Even if they were present, they would be extremely unlikely to enter the Action Area.

Life history information on Southern Resident killer whales potentially found in the Action Area can be found in the following references: Braham and Dahlheim (1982); Reeves and Leatherwood (1994); Dahlheim and Heyning (1999); Ford et al. (2000); Barrett-Lennard and Ellis (2001); NOAA (2006).

### 4.1.7 Humpback Whale

The humpback whale was listed as endangered when the Endangered Species Act was enacted in 1970. Humpback whales inhabit coastal waters with high plankton and forage fish productivity and are typically found within about 50 nautical miles of shore (Evans 1987, Calambokidis and Steiger 1995). They are dependent on abundant food resources because of their size and metabolic needs for reproduction, nursing, and sustenance during times of the year (i.e., winter) when food resources are less abundant (Evans 1987).

Humpback whales typically inhabit coastal areas because of the productivity of these habitats. They rarely enter the inland waters of the Straits of Juan de Fuca and Georgia, or Puget Sound. Prior to 2003, only three individual whales had been observed in these inland waters, and although reported sightings have increased in recent years with 13 different individuals during 2003 and 2004, most of these whales were in the Straits and not in Puget Sound (Falcone et al. 2005). Based

on OrcaNetwork sightings, humpbacks occasionally appear in the western portion of Guemes Channel. No known sightings have occurred in Fidalgo Bay or Padilla Bay. Given their habitat requirements for feeding and breeding, it is extremely unlikely that humpback whales would visit the Action Area. It is not expected these whales would be present in Guemes Channel or Fidalgo Bay at any time.

Life history information on humpback whales potentially found in the Action Area can be found in the following references: Braham 1991; Calambokidis et al. 1997, 1998, 2001; Calambokidis and Quan 1997; Calambokidis and Steiger 1995; Evans 1987; Scheffer and Slipp 1948.

### 4.1.8 Marbled Murrelet

The marbled murrelet was listed as threatened on October 1, 1992 (USFWS 1992). Marbled murrelets feed in marine waters but nest in old-growth coniferous forests. While murrelet at-sea foraging behavior is not well understood, murrelets are typically observed foraging in marine waters between 20 and 80 meters (65 and 262 feet) deep, though they have been observed foraging in water as shallow as 1 meter (3 feet) and as deep as 100 meters (328 feet) (Ralph et al. 1995). Marbled murrelets reportedly feed on a wide variety of prey, including sand lance, Pacific herring, and other marine taxa such as crustaceans. Murrelets nest in old growth or mature forest composed of conifers, including Douglas fir, western red cedar, Sitka spruce, and western hemlock. Designated critical habitat for the marbled murrelet applies only to nesting habitat and does not occur in the Action Area (USFWS 2011). Murrelets have been reported in Fidalgo Bay but are not likely to be present regularly within the Action Area.

Life history and population information on marbled murrelets potentially found in the Action Area can be found in the following references: Carter 1984; Parametrix, Inc. 1996; Ralph et al. 1995; USFWS 1995, 1996, 1997.

## 4.2 DESIGNATED CRITICAL HABITATS

### 4.2.1 Puget Sound Chinook Salmon Critical Habitat

On September 2, 2005, the NMFS designated critical habitat for 12 Evolutionary Significant Units (ESU) of Pacific salmon and steelhead, including critical habitat for the Puget Sound Chinook ESU (NOAA 2005b). Critical habitat for this ESU includes 15 associated subbasins within Puget Sound and the Nearshore Marine Areas (Unit 16). Nearshore Marine Areas include the entirety of the nearshore zones of Puget Sound (including areas adjacent to islands), Hood Canal, and the Strait of Juan de Fuca (to the mouth of the Elwha River) (NOAA 2005c). The Nearshore Marine Areas are further divided into subunits based on the boundaries separating the 19 Water Resource Inventory Areas (WRIAs) that discharge into Puget Sound. The Project Action Area is located within Nearshore Marine Area 3, Lower Skagit/Samish Subbasin (corresponding to WRIA 3) (NOAA 2005b).

Designated critical habitat within the Nearshore Marine Areas includes elevations from Extreme High Water (EHW; +10.9 ft MLLW) to -30 m (-98 ft) MLLW. The focus within the Nearshore Marine Areas has been identified as photic zone habitat based on the presence of macrophytes (eelgrass and macroalgae) that are vital to rearing, migrating, and maturing chinook salmon and their prey (NOAA 2005b). Based on this designation, all aquatic habitats in the Action Area below

+10.9 ft MLLW (the uppermost extent of EHW in Fidalgo Bay) are designated as critical habitat for chinook salmon.

### 4.2.2 Southern Resident Killer Whale Critical Habitat

NOAA designated critical habitat for Southern Resident killer whale on November 29, 2006, effective December 29, 2006. Three areas have been designated as critical habitat: Area 1: the Core Summer Area in Haro Strait and waters around the San Juan Islands; Area 2: Puget Sound excluding Hood Canal; and Area 3: the Strait of Juan de Fuca. The Project Action Area is located within Area 1: Core Summer Areas. Designated critical habitat for Southern Residents includes only waters in Puget Sound deeper than -20 ft relative to EHW (+10.9 ft MLLW), or -9.1 ft MLLW. None of the Project Area is deeper than -9.1 ft MLLW, but much of the Action Area is deeper than this. Further, NOAA GIS data includes Curtis Wharf within Southern Resident killer whale critical habitat.

### 4.2.3 Rockfish Critical Habitat

On August 6, 2013, NOAA proposed critical habitat for two ESA-listed rockfish species: bocaccio and yelloweye rockfish (NOAA 2013c). NOAA identified two categories of proposed critical habitat: deepwater critical habitat that is used by adults (deeper than 98 ft), applicable for both rockfish species, and nearshore critical habitat (no deeper than 98 ft) that is used as settlement sites for juveniles, applicable to bocaccio. The Action Area is within nearshore critical habitat for bocaccio rockfish. Deepwater critical habitat, the only type applicable to yelloweye rockfish, is not present in the Action Area.

# 5. EFFECTS OF THE PROJECT

Project activities would occur on and under the deck of Curtis Wharf, over intertidal/shallow subtidal and subtidal aquatic/marine habitat. No in-water work is proposed. This section evaluates the impacts of the Project on federally threatened and endangered species. Potential impacts of the Project would be from construction over the water and risks of spills of hazardous materials, which have been avoided and minimized. The impacts of these actions on ESA-listed species are analyzed below. All activities to occur above HTL.

## 5.1 CONSTRUCTION

The proposed Project at Curtis Wharf will install two shore power pedestals and associated electrical infrastructure, as well as installing a blackwater pump and associated sewer infrastructure. All construction will occur over the water from the wharf or from a small work skiff or float. The installation of the components is considered minor activities and will result in no impacts to existing habitat and species. All installation will be conducted using hand tools, either on top of the deck of Curtis Wharf or beneath from a work skiff, resulting in no potential for adverse impacts.

These potential effects are discussed individually below.

## 5.2 EFFECTS ON SALMONIDS

### 5.2.1 Potential Water Quality Impacts from Spills

Construction activities have the potential to affect water quality by increasing chemical contamination, primarily due to unintentional releases of fuel, lubricants, or fluids from work skiff. However, no such tools will be used. All tools used beneath the deck are anticipated to be battery-operated hand tools. Gas-powered tools may be used above deck, but as the work would be conducted on the deck of Curtis Wharf, any spills would be contained entirely on the deck surface. There is no potential for any spills to enter the water.

Installation activities beneath the deck will occur from a work skiff/float. This would be no different than a small boat using Guemes Channel. Since hand-held tools would likely be battery powered, no fuels or fluids would be used or have potential to spill into the water.

For these reasons, there is no potential for spills or water quality impacts. Therefore, there would be no water quality effects on salmonids present in the Action Area.

#### *5.2.1.1 Vessel Usage*

The proposed Project will ensure the continued safe usage of the wharf. The Project will not impact the vessel usage within Curtis Wharf, rather it would ensure that the wharf can continue to meet the needs of the current tenants. Since the proposed project will not result in any increase in vessel usage, the project will not result in any adverse indirect effects on salmonids.

#### *5.2.1.2 Overwater Shading*

The proposed project would not change the overwater coverage of the existing docks. The proposed Project would install conduits or pipes above or below the deck. The project would not result in any effects associated with overwater shading.

### 5.3 EFFECTS ON ROCKFISH

As discussed above, there is a low likelihood of rockfish/bocaccio utilizing the Action Area, and this likelihood is even lower for yelloweye rockfish. Larvae for the two species may be present in the water column but given the distribution and overall low numbers of adults, it is unlikely that many larvae would be present at any given time. Juvenile bocaccio could possibly utilize the nearshore habitat adjacent to the Action Area for settling habitat, though the Action Area generally lacks the type of high relief habitat they prefer.

However, because of the nature of the work (attaching components on the deck surface and on the underside of the deck), even if rockfish were present there is no mechanism for impacts to rockfish.

### 5.4 EFFECTS ON SOUTHERN RESIDENT KILLER WHALE AND HUMPBACK WHALE

Using NMFS' SRKW Sightings Map (NMFS 2025), Southern Resident killer whales have been observed in Guemes Channel 52 times between 1999 and 2022. Over half of these sightings have occurred in June and July (32 of 52), and 43 of 52 sightings from May – August. Humpback whale sightings are similarly uncommon.

However, due to the size of these animals, there is no physical possibility for them to enter the Action Area, due to the shallow water, narrow passageways between piles, and unsuitable habitat. The potential for any of these two species ever entering the Action Area is so remote as to be discountable.

There are three pathways for potential effects on marine mammals: physical disturbance, prey quantities, and contaminants/prey quality. These are addressed below.

**Table 3. Summary of effects on marine mammals.**

| Effects Pathway | Species | Effects Determination | Justification |
|---|---|---|---|
| **Sound**<br>-None identified | Southern Resident killer whale | No Effect | Undetectable levels of noise |
| | Humpback whale | No Effect | |
| **Physical Disturbance**<br>-None identified | Southern Resident killer whale | No Effect | Species not present; negligible disturbance |
| | Humpback whale | No Effect | |
| **Prey Quantity**<br>-salmonids, forage fish | Southern Resident killer whale | No Effect | No effect for salmonids; no effect on forage fish; species not present |
| | Humpback whale | No Effect | |
| **Contaminants/ Prey Quality**<br>-Construction | Southern Resident killer whale | No Effect | No potential mechanisms for increased contaminants in Curtis Wharf and no net increase in contaminant levels in prey. |
| | Humpback whale | No Effect | |

### 5.4.1 Sound Disturbance Pathway

The proposed Project would be completed using hand tools and any noise associated with the Project would be far below background noise. Any whales present would not be affected by such noise. Further, due to the shallow water, nearshore location, confined and busy nature of the Action Area, ESA-listed marine mammals (Southern Resident killer whale, humpback whale) will not enter the Action Area. There are no potential impacts on ESA-listed marine mammals due to their inability to access the Action Area. This, combined with the lack of impact mechanism, results in no effects on marine mammals related to sound.

### 5.4.2 Physical Disturbance Pathway

Construction vessels present in Curtis Wharf would consist of a small work float and small work skiff. These vessels will be consistent with the existing vessels present within Curtis Wharf. These vessels will be operated within and around the wharf and would have no potential to result in a physical disturbance pathway. No net change in vessel activity or elements of potential physical disturbance (e.g. vessel mooring, physical obstructions, etc.) would occur. Since these marine mammal species are extremely unlikely to be present in the Action Area, physical disturbance would have no effect on them. Even if present in greater Guemes Channel, the level of disturbance would be comparable to ongoing boating activities and disturbance, and would be undetectable to ESA-listed marine mammals.

### 5.4.3 Prey Quantities

As discussed above in Section 5, the Project is located entirely on top and attached to the underside of Curtis Wharf. The Project would not change overwater coverage or result in conditions that could affect salmonids and other marine mammal prey resources. Additionally, there are no mechanisms for the proposed project to impact prey quantities thus there is no effect.

For these reasons, the Project will not affect salmonids. The Project would have a similar negligible effect on other fish species that may be prey for these marine mammals. Therefore, the Project would have no effect on ESA-listed marine mammal prey quantities.

### 5.4.4 Contaminants/Prey Quality

As discussed above, no risk of water quality impairment associated with the Project is anticipated. Work on top of the deck would have no risk of spills as the work would be entirely contained on top of the deck. Work below the deck includes no work that has potential risks of spills. No other sources of contaminants are anticipated. Thus, no net increase in contaminants in marine mammal prey items would occur, and the Project would have no effect on marine mammals relative to contaminants or prey quality.

Overall, the Project would have ***no effect*** on ESA-listed marine mammals.

## 5.5 Effects on Marbled Murrelet

As discussed in Section 4.1.8, marbled murrelets are occasionally present within Fidalgo Bay and Guemes Channel. However, there are no potential actions that could impact marbled murrelets as

the birds are not expected to be present due to the existing heavy vessel traffic within Curtis Wharf. Additionally, they are also unlikely to enter Curtis Wharf due to the low quality of Curtis Wharf as foraging habitat and the ongoing anthropogenic activity. For this reason, it is unlikely that marbled murrelets would be present in the Action Area during Project activities. If present, the Project would not result in noise and activity greater than the existing conditions and no impacts to foraging will occur. No long-term impacts are anticipated.

The potential impacts of the proposed project on marbled murrelets are considered negligible due to the unlikelihood of marbled murrelets being present within Curtis Wharf and the lack of impact mechanism. Therefore, the Project would have ***no effect*** on marbled murrelets.

## 5.6 Interrelated and Interdependent Actions

Interrelated actions are actions that are part of a larger action and depend on the larger action for its justification. Interdependent actions are those that have no independent utility apart from the proposed Project. No interrelated or interdependent actions have been identified.

## 5.7 Cumulative Effects

Cumulative effects from an ESA perspective considers future non-Federal actions (i.e., non-Federal projects and projects that do not require Federal permits) that may affect habitat within the Action Areas. Cumulative beneficial effects could result from the upgrades to Curtis Wharf. The installation of shore power could lead to a reduction in emissions from vessels moored at Curtis Wharf that no longer need to run generators to maintain power while moored. The installation of a pump out facility could reduce the risk of sewage discharges to Puget Sound. Both of these would result from the effects of non-Federal actions (ship calls and moorage at Curtis Wharf). Thus, cumulative effects of the Project are entirely beneficial

Any future project that entails over-water work will require a federal permit and appropriate ESA review.

# 6. EFFECTS ON CRITICAL HABITAT

## 6.1 PUGET SOUND CHINOOK SALMON CRITICAL HABITAT

The NOAA identified six Primary Constituent Elements (PCEs) (i.e., physical and biological features) essential to the conservation of Chinook salmon critical habitat (NOAA 2005b). For the purposes of this assessment, the Project Area is considered to be in a nearshore marine area. Thus, of the six PCEs listed below, only number five (bolded) applies to the Action Area.

1. Freshwater spawning sites with water quantity and quality conditions and substrate supporting spawning, incubation, and larval development.
2. Freshwater rearing sites with water quantity and floodplain connectivity to form and maintain physical habitat conditions and support juvenile growth and mobility; water quality and forage supporting juvenile development; and natural cover such as shade, submerged and overhanging large wood, log jams and beaver dams, aquatic vegetation, large rocks and boulders, side channels, and undercut banks.
3. Freshwater migration corridors free of obstruction and excessive predation with water quantity and quality conditions and natural cover such as submerged and overhanging large wood, aquatic vegetation, large rocks and boulders, side channels, and undercut banks supporting juvenile and adult mobility and survival.
4. Estuarine areas free of obstruction and excessive predation with water quality, water quantity, and salinity conditions supporting juvenile and adult physiological transitions between fresh- and saltwater; natural cover such as submerged and overhanging large wood, aquatic vegetation, large rocks and boulders, and side channels; and juvenile and adult forage, including aquatic invertebrates and fishes, supporting growth and maturation.
5. **Nearshore marine areas free of obstruction and excessive predation with water quality and quantity conditions and forage, including aquatic invertebrates and fishes, supporting growth and maturation; and natural cover such as submerged and overhanging large wood, aquatic vegetation, large rocks and boulders, and side channels.**
6. Offshore marine areas with water quality conditions and forage, including aquatic invertebrates and fishes, supporting growth and maturation.

Based on the designations provided for nearshore marine areas, all the Action Area below EHW (+10.9 ft MLLW) is considered Chinook designated critical habitat. Effects of the Project on the components of PCE #5 are presented below.

### 6.1.1 Primary Constituent Element # 5: Nearshore Areas

#### *6.1.1.1 Water Quality and Quantity*

The effects of the Project on water quality and quantity will be negligible due to the nature of the project. The project does not include any actions that will occur in the water and there is a low potential for any spills (due to the use of work float or working on existing docks). Likewise, over the long-term, the Project would have no effect on water quality in the Project Area. The Port of Anacortes is a member of Green Marine (an environmental certification program of maritime

operators), and as a result, the Port and tenants abide by an Operations Plan and BMPs that assist limit the impacts of the marina on water quality. The post-project operations at the docks will be identical to the existing conditions, thus the proposed project would not result in any impacts to water quality. The completed project may result in improvements to water quality through the expanded access to pump out facilities.

Water quantity would not be affected by the Project.

#### *6.1.1.2 Forage*

The Project will have no component that could affect forage opportunities for juvenile chinook. The Project will not result in any changes to overwater coverage and would not result in any increase in potential impacts. The conditions during construction along with the conditions following construction would be the same as the existing conditions. No aspect of the project would affect the epibenthic community within the Action Area. Adult Chinook are not expected to be present in appreciable numbers. If present, there is no mechanism that is reasonably likely to affect their behavior—use of a work skiff beneath the deck would not affect behavior of adult Chinook. Further, the construction activities will not result in conditions that would affect the natural behavior of chinook. There would be no long-term effect on adult Chinook forage. Overall, the Project would have no short or long-term effects on the Action Area's quality as forage habitat.

#### *6.1.1.3 Natural Cover*

Natural cover in the Action Area is not present and no side-channels or naturally occurring boulders occur in the Action Area. No aspect of the project has any mechanism to affect these features.

Overall, the Project will not affect Chinook salmon critical habitat.

### 6.2 EFFECTS ON PROPOSED ROCKFISH CRITICAL HABITAT

NOAA identified three essential features of rockfish critical habitat. The same three features were identified for both nearshore and deepwater habitat; however, only two of them apply to nearshore habitat. Additionally, nearshore habitat is only applicable to bocaccio. Nearshore critical habitat is not applicable to yelloweye rockfish based on their preference for deepwater habitat, even among juveniles. Since the Action Area is only within nearshore habitat, not deepwater habitat, only the features applicable to nearshore habitat are addressed below. The essential habitat features identified by NOAA are listed below, with the features applicable to nearshore habitat in bold.

1. **Quantity, quality, and availability of prey species to support individual growth, survival, reproduction, and feeding opportunities.**

2. **Water quality and sufficient levels of dissolved oxygen to support growth, survival, reproduction, and feeding opportunities.**

3. The type and amount of structure and rugosity that supports feeding opportunities and predator avoidance.

The Project's effects on proposed rockfish critical habitat are analyzed with respect to the effects on the essential habitat features mentioned above. The applicable features are addressed below.

### 6.2.1 Essential Feature #1: Prey

Juvenile rockfish feed on very small organisms such as zooplankton, copepods and phytoplankton, small crustaceans, invertebrate eggs, krill, and other invertebrates (NOAA 2013c). These prey species are planktonic, floating in the water column. The Project will have no effect on overwater coverage and has no potential to impact prey species. Over the long-term, the Project would have no effects on juvenile rockfish prey items.

### 6.2.2 Essential Feature #2: Water Quality

The effects of the Project on water quality are addressed in Section 5.3 of this document. There would be no impacts to water quality due to the fact that the only above-water work would be the use of a work skiff. This would be the equivalent of normal boat use that occurs constantly at Curtis Wharf, and would have no realistic potential for water quality impacts. Overall, the Project would have no effect on water quality in the Project Area.

Overall, the Project would result in ***no effects*** on rockfish critical habitat.

## 6.3 EFFECTS ON SOUTHERN RESIDENT KILLER WHALE CRITICAL HABITAT

NOAA has identified three primary constituent elements (PCEs; i.e. physical and biological features) essential to the conservation of Southern Resident killer whale critical habitat (NOAA 2006a).

1. Water quality to support growth and development;
2. Prey species of sufficient quantity, quality, and availability to support individual growth, reproduction, and development, as well as overall population growth;
3. Passage conditions to allow for migration, resting and foraging;

Southern Resident killer whale critical habitat begins at -20 ft relative to EHW (approximately -9.1 ft MLLW). Thus, only the waterward most portion of the Action Area is within Southern Resident killer whale critical habitat. Effects of the Project on SRKW critical habitat are discussed below.

### 6.3.1 Primary Constituent Element #1: Water Quality

The effects of the Project on water quality are addressed in Sections 5.3 of this document. Project construction will have no potential for temporary or long-term reductions in water quality. The potential for impacts to water quality would be associated with the risk of spills associated with the small work skiff/float, but this would be avoided and minimized using BMPs, and this use is simply common small boat usage, such as occurs on a daily basis at Curtis Wharf. Thus, the Project's effects on this PCE would be non-existent on habitat actually accessed by Southern Resident killer whale.

### 6.3.2 Primary Constituent Element #2: Prey Quantity, Quality, and Availability

Southern Resident killer whales prey mainly on salmonids and may prefer chinook and chum salmon runs within Puget Sound (NOAA 2006a). Consumption of a considerable biomass of fish is vital to growth and sexual maturity in Southern Residents and enables population growth of the pods. The Project has no potential to adversely impact salmonids, thus the Project will have no effect on prey resources. Thus, the Project's effects on PCE 2 would be undetectable.

### 6.3.3 Primary Constituent Element #3: Passage Conditions

As discussed in Section 4.1.6, Southern Resident killer whale sightings in Guemes Channel are relatively uncommon (NMFS 2025). Further, the likelihood of Southern Resident killer whale entering the active Curtis Wharf is discountable due to the shallow water, confined space beneath the wharf, and active waterfront. Based on the location of the proposed project and the Action Area, the action would have no effects on passage conditions. Thus, the Project would have no effects on PCE 3.

Overall, the Project would have ***no effect*** on Southern Resident killer whale critical habitat.

# 7. REGULATORY CONSIDERATION AND AVOIDANCE AND MINIMIZATION MEASURES

Federal, state, and local permits contain conditions that are intended to reduce the potential for short-term effects from in-water Project activities and long-term effects from habitat impacts. These provisions comprise an extensive list of considerations and measures that are applied to projects in or near estuarine and marine waters.

## 7.1 GENERAL AVOIDANCE AND MINIMIZATION MEASURES:

- The Project will obtain and comply with applicable permits/approvals.
- Timing restrictions specifying that construction must occur when juvenile salmonids are absent or present in very low numbers in the adjacent water body would be strictly observed. All timing restrictions that may be established by WDFW, the USACE, NMFS, or USFWS would be strictly observed (USACE permit and HPA). Anticipated to be July 16 to February 15 (Tidal Area 9).
- Any discharge of oil, fuel or chemicals into state waters is prohibited.
- Corrective actions will be taken in the event of any discharge of oil, fuel, or chemicals into the water, including:
    - In the event of a spill, containment and cleanup efforts will begin immediately and be completed as soon as possible, taking precedence over normal work. Cleanup will include proper disposal of any spilled material and used cleanup material.
    - The cause of the spill shall be assessed, and appropriate action will be taken to prevent further incidents or environmental damage.
- Spills and/or conditions resulting in distressed or dying fish shall be reported immediately to DOE's Northwest Regional Spill Response Office at (425) 649-7000 (a 24-hour phone number). Spills of oil or hazardous materials also shall be reported immediately to the National Response Center at 1 (800) 424-8802 and the Washington Emergency Management Division at 1 (800) 258-5990 or 1 (800) OILS-911.
- The contractor will have a spill containment kit, including oil-absorbent materials, on site to be used in the event of a spill or if any oil product is observed in the water.
- Operations will be stopped temporarily if listed species are observed as injured, sick, or dead in the project area to evaluate whether additional listed species are present and to assess whether operations may continue without further impact. NMFS law enforcement will be notified, and fish will be handled with care to ensure effective treatment or analysis of cause of death or injury.
- There are no proposed changes in use, size, layout, or footprint of Curtis Wharf.
- All construction activities will occur above the water's surface. All work would either be underneath the wharf from a small skiff or work float, around the bull rail of the wharf from a small skiff or work float, or on surface the wharf itself.

- Small hand tools such as wrenches, pliers, cutters, files, hammered tools, screwdrivers, vises, clamps, snips, shims, saws, drills, etc. will be used to complete the above-water installation work to avoid possible impacts from in-air and in-water noise.
- All equipment and materials will be carried along Curtis Wharf by hand, on-deck vehicle transport, dock cart, or small skiff.
- Any replacement materials will be cut, treated, drilled, and shaped as much as practical off site. Any on-site carpentry work shall be conducted upland before the material is hand carry onto docks for installation.
- Contractor shall incorporate marine related best management practices when conducting the work to prevent materials and debris from entering surface waters. Construction debris will not be allowed to enter surface waters. Construction debris bibs will be installed at work areas to capture potential debris or materials.
- All removed materials from wharf will be carried upland and transported and disposed of appropriately.
- Work will be performed during day-time hours.
- Proposed work will not begin prior to obtaining all necessary local, state, and federal permits and/or approvals.
- The contractor will comply with permit conditions.

# 8. CONCLUSIONS AND DETERMINATIONS

## 8.1 LISTED SPECIES

### 8.1.1 Puget Sound Chinook Salmon, Coastal-Puget Sound Bull Trout and Puget Sound Steelhead Trout

The Project has no mechanism by which to affect ESA-listed salmonids potentially present in the Action Area. Further, based on the developed nature of the Action Area, fish use of the Action Area is likely to be minimal. Overall, based on the analysis in this memo, the Project will have ***no effect*** on Sound chinook salmon, Coastal-Puget Sound bull trout, and Puget Sound steelhead trout.

### 8.1.2 Bocaccio and Yelloweye Rockfish

The Action Area is marginal habitat for juvenile bocaccio and is not expected to be used at all by juvenile yelloweye or by adults of any of these species. The Project has no mechanism to affect these species, and the Project would have no long-term effects on rockfish. Based on the analysis in this memo, the Project will have ***no effect*** on bocaccio and yelloweye rockfish.

### 8.1.3 Marbled Murrelet

It is unlikely that marbled murrelets would occur in the Action Area. The Action Area is poor foraging habitat. If present, the Project has no mechanism by which to affect this species. Based on the analysis in this document, the Project will have ***no effect*** on marbled murrelets.

### 8.1.4 Southern Resident Killer Whale and Humpback Whale

Since Curtis Wharf is located in relatively shallow nearshore habitat, is a confined marine area, and is subject to heavy boating traffic, the likelihood of Southern Resident killer whale or humpback whale entering the Action Area at any time is discountable. Further, even if they were present, the Project has no realistic impact mechanism, as discussed above. Based on the analysis in this memo, the Project will have ***no effect*** on Southern Resident killer whale or humpback whale.

## 8.2 DESIGNATED CRITICAL HABITATS

### 8.2.1 Puget Sound Chinook Salmon Critical Habitat

The Project would have no effects on Puget Sound chinook salmon critical habitat. The proposed project would not result in the increase in size, configuration, or use of the existing wharf. Additionally, the proposed construction activities would have a discountable likelihood of potential impacts on critical habitats due to the use of hand tools and the fact that the work will occur from the existing docks or work skiff. Over the long-term, no impacts are anticipated. Therefore, the Project will have ***no effect*** on chinook salmon critical habitat.

### 8.2.2 Southern Resident Killer Whale Critical Habitat

Based on the shallow, confined nature of the Action Area, there is virtually no chance of Southern Resident killer whale use of the habitat, even though it is mapped as critical habitat. Impacts on prey resources would be undetectable. The Project would have no long-term effects on Southern Resident killer whale critical habitat. Therefore, the Project would have ***no effect*** on Southern Resident killer whale critical habitat.

### 8.2.3 Rockfish Critical Habitat

The Project would have no effects on proposed nearshore rockfish critical habitat as impacts on prey resources would be negligible/undetectable. The Project would have no long-term effects on habitat features. Therefore, the Project will have ***no effect*** on rockfish critical habitat.

## 9. REFERENCES CITED


Barrett-Lennard, L.G. and G.M. Ellis. 2001. Population structure and genetic variability in northeastern Pacific killer whales: towards an assessment of population viability. Research Document 2001/065, Department of Fisheries and Oceans, Nanaimo, British Columbia.

Bonneau, J.L. and D.L. Scarnechia. 1996. Distribution of juvenile bull trout in a thermal gradient of a plunge pool in Granite Creek, Idaho. Transactions of the American Fisheries Society 125: 628-630.

Braham, H.W. and M.E. Dahlheim. 1982. Killer whales in Alaska documented in the Platforms of Opportunity Program. Report of the International Whaling Commission 32:643-646.

Braham, H.W. 1991. Endangered whales: Status update. A report on the 5-year status of stocks review under the 1978 amendments to the U.S. Endangered Species Act. National Marine Fisheries Service Unpublished Report.

Buchanan, D.V. and S.V. Gregory. 1997. Development of water temperature standards to protect and restore habitat for bull trout and other cold water species in Oregon. Pages 119-126 in Mackay, W.C., M.K. Brewin, and M. Monita, editors. Friends of the bull trout conference proceedings. Bull Trout Task Force (Alberta), c/o Trout Unlimited Canada. Calgary, Alberta, Canada.

Calambokidis, J., and G.H. Steiger. 1995. Population estimates of humpback and blue whales made through photo-identification from 1993 surveys off California. Report to Southwest Fisheries Science Center, National Marine Fisheries Service. La Jolla, California.

Calambokidis, J., G.H. Steiger, J.M. Straley, T.J. Quinn II, L.M. Herman, S. Cerchio, D.R. Salden, M. Yamaguchi, F. Sato, J. Urban, J. Jacobsen, O. vonZeigesar, K.C. Balcomb, C.M. Gagbriele, M.E. Dahlheim, M. Higashi, S. Uchida, J.K.B. Ford, Y. Miyamura, P. Ladron de Guevara, S.A. Mizroch, L. Schlender, and K. Rasmussen. 1997. Abundance and population structure of humpback whales in the north Pacific basin. Report to Southwest Fisheries Science Center, National Marine Fisheries Service, La Jolla, California.

Calambokidis, J., T. Chandler, K. Rasmussen, and G.H. Steiger. 1998. Humpback whales and other marine mammals off Costa Rica, 1996-98. Cascadia Research, Olympia, Washington.

Calambokidis, J., T. Chandler, L. Schlender, K. Rasmussen, and G. Steiger. 2001. Research on Humpback and Blue Whales off California, Oregon, and Washington in 2000. Cascadia Research. Olympia, Washington. June 2001.

Calambokidis, J., and J. Quan. 1997. Gray whales in Washington State: Report on research in 1996. Final report to National Marine Mammal Laboratory, Seattle, Washington.

Carter, H.R. 1984. At-sea biology of the marbled murrelet (*Brachyramphus marmoratus*) in Barkley Sound, British Columbia. M.S. thesis. University of Manitoba, Winnipeg, Manitoba.

City of Anacortes. 1999. Revised Final Integrated Fidalgo Bay-Wide Plan and EIS. Anacortes, Washington. March 26, 1999.

Committee of the Status of Endangered Wildlife in Canada (COSEWIC) 2002. COSEWIC assessment and status report on the Bocaccio Sebastes paucispinis in Canada. Committee on the Status of Endangered Wildlife in Canada. Ottawa. vii + 43 pp.

Committee of the Status of Endangered Wildlife in Canada (COSEWIC). 2007. COSEWIC assessment and status report on the canary rockfish Sebastes pinniger in Canada. Committee on the Status of Endangered Wildlife in Canada. Ottawa. vii + 71 pp. (www.sararegistry.gc.ca/status/status_e.cfm).

Dahlheim, M.E. and J.E. Heyning. 1999. Killer whale *Orcinus orca* (Linnaeus, 1758). Pages 281-322 *in* S. Ridgway and R. Harrison, editors. Handbook of marine mammals. Academic Press, San Diego, California.

Duker, G. C. Whitmus and E.O. Salo, G. B. Grette, and W.M. Schuh. 1989. Distribution of juvenile salmonids in Commencement Bay, 1983. University of Washington, Fisheries Research Institute. Seattle, Washington.

Evans, P.G.H. 1987. The natural history of whales and dolphins. Facts on File Publications. New York, New York.

Falcone, E., J. Calambokidis., G. Steiger, M. Malleson, and J. Ford. 2005. Humpback whales in the Puget Sound/Georgia Strait Region in Proceedings of the 2005 Puget Sound Georgia Basin Research Conference. http://www.engr.washington.edu/epp/psgb/2005psgb/2005proceedings/papers/A2_FALCO.pdf.

Ford, J.K.B., G.M. Ellis, and K.C. Balcomb. 2000. Killer whales: the natural history and genealogy of *Orcinus orca* in British Columbia and Washington State. 2nd ed. UBC Press, Vancouver, British Columbia.

Healey, M.C. 1991. Life history of chinook salmon (*Oncorhynchus tshawytscha*). *in* C. Groot and L. Margolis (eds.), Pacific Salmon Life Histories. UBC Press, Vancouver, Canada.

Kraemer, C. 1994. Some observations on the life history and behavior of the native char Dolly Varden (*Salvelinus malma*) and bull trout (*Salvelinus confluentus*) of the north Puget Sound region. Washington Department of Fisheries Baitfish Unit. Mount Vernon, Washington.

Lee, D.C., J.R. Sedell, B.E. Rieman, R.F. Thurow, J.C. Williams and others. 1997. Chapter 4: Broadscale Assessment of Aquatic Species and Habitats. *In* T.M. Quigley and S.J. Arbelbide (eds.), An Assessment of Ecosystem Components in the Interior Columbia Basin and Portions of the Klamath and Great Basins Volume III. U.S. Department of Agriculture, Forest Service, and U.S. Department of Interior, Bureau of Land Management, Gen Tech Rep PNW-GTR-405.

Love, M.S., M.H. Carr, and L.J. Haldorson. 1991. The ecology of substrate-associated juveniles of the genus *Sebastes*. Environmental Biology of Fishes 30:225-243.

Love, M.S., M. Yoklavich, and L. Thorsteinson. 2002. The Rockfishes of the Northeast Pacific. University of California Press. 405

Miller, B.S. and S.F. Borton. 1980. Geographical Distribution of Puget Sound Fishes: Maps and data source sheets. University of Washington Fisheries Research Institute, 3 vols.

Miller, B.S., C.A. Simenstad, L.L. Moulton, W.A. Karp, K.L Fresh, and F.C. Funk. 1977. Puget Sound baseline program nearshore fish summary: Data summary report. Fisheries Research Institute, University of Washington. FRI-UW-7711. Seattle, Washington.

National Marine Fisheries Service (NMFS). 1998. Proposed recommendations for Amendment 14 to the Pacific Coast salmon plan for essential fish habitat. March 26, 1998.

National Marine Fisheries Service (NMFS). 2005. Status Review Update for Puget Sound Steelhead. Prepared by NMFS Puget Sound Steelhead Biological Review Team. July 2005.

National Marine Fisheries Service (NMFS). 2007. Endangered Species Act—Section 7 Consultation Biological Opinion and Magnuson-Stevens Fishery Conservation and Management Act Essential Fish Habitat Consultation: Port of Anacortes Project Pier 1 Project, Lake Campbell, 171100020204, Skagit County, Washington State. Prepared by NMFS Northwest Region for U.S. Army Corps of Engineers. April 2007.

National Marine Fisheries Service (NMFS) Biological Review Team (BRT). 2008. Preliminary scientific conclusions of the review of the status of 5 species of rockfish: bocaccio (*Sebastes paucispinis*), canary rockfish (*Sebastes pinnige*), yelloweye rockfish (*Sebastes ruberrimus*), greenstriped rockfish (*Sebastes elongatus*), and redstripe rockfish (*Sebastes proriger*) in Puget Sound, Washington. NMFS Northwest Fisheries Science Center. Seattle, WA. December 2, 2008.

National Oceanic and Atmospheric Administration (NOAA). 1999. Endangered and Threatened Species: Threatened Status for Three Chinook Salmon Evolutionary Significant Units in Washington and Oregon, and Endangered Status of One Chinook Salmon ESU in Washington. Federal Register, Volume 64, Number 56: 14308-14328. March 24, 1999.

National Oceanic and Atmospheric Administration (NOAA). 2005a. Endangered and Threatened Wildlife and Plants: Endangered Status for Southern Resident Killer Whales. 50 CFR Part 224. RIN No. 0648-AS95. November 18, 2005.

National Oceanic and Atmospheric Administration (NOAA). 2005b. Endangered and Threatened Species; Designation of Critical Habitat for 12 Evolutionary Significant Units of West Coast Salmon and Steelhead in Washington, Oregon, and Idaho. 50 CFR Part 226. RIN No. 0648-AQ77. September 2, 2005.

National Oceanic and Atmospheric Administration (NOAA). 2005c. Final Assessment of NOAA Fisheries' Critical Habitat Analytical Review Teams for 12 Evolutionarily Significant Units of Pacific Salmon and Steelhead. Prepared by NOAA Fisheries Protected Resources Division. August 2005.

National Oceanic and Atmospheric Administration (NOAA). 2006. Endangered and Threatened Species; Designation of Critical Habitat for Southern Resident Killer Whale. Federal Register, Volume 71, Number 229: 69054-69070. November 29, 2006.

National Oceanic and Atmospheric Administration (NOAA). 2007. Endangered and Threatened Species: Final Listing Determination for Puget Sound Steelhead. Federal Register, Volume 72, Number 91: 26722-26735. May 11, 2007.

National Oceanic and Atmospheric Administration (NOAA). 2009. Endangered and Threatened Wildlife and Plants: Proposed Endangered, Threatened, and Not Warranted Status for Distinct Population Segments of Rockfish in Puget Sound. Federal Register, Volume 7, Number 77: 18516-18542. April 23, 2009.

National Oceanic and Atmospheric Administration (NOAA). 2010. Endangered and Threatened Wildlife and Plants: Threatened Status for the Puget Sound/Georgia Basin Distinct Population Segments of Yelloweye and Canary Rockfish and Endangered Status for the Puget Sound/Georgia Basin Distinct Population Segment of Bocaccio Rockfish. Federal Register, Volume 75, Number 81:22276-22290. April 28, 2010.

National Oceanic and Atmospheric Administration (NOAA). 2013a. Northwest Regional Office Species Lists. http://www.nmfs.noaa.gov/pr/species/esa/listed.htm#fish. Queried August 21, 2013.

National Oceanic and Atmospheric Administration (NOAA). 2013b. Endangered and Threatened Species; Delisting of the Eastern Distinct Population Segment of Steller Sea Lion Under the Endangered Species Act; Amendment to Special Protection Measures for Endangered Marine Mammals: Final Rule. 50 CFR Parts 223 and 224. RIN No. 0648-BB41. Federal Register, Volume 78, Number 213:66140-66199. November 4, 2013.

National Oceanic and Atmospheric Administration (NOAA). 2013c. Endangered and Threatened Species; Designation of Critical Habitat for yelloweye rockfish, canary rockfish, and bocaccio of the Puget Sound/Georgia Basin: Proposed Rule. 50 CFR Part 226. RIN No. 0648-BC76. Federal Register, Volume 78, Number 151:47635-47669. August 6, 2013.

Parametrix, Inc. 1985. Sand/gravel/riprap colonization study. Prepared for the Port of Seattle.1985.

Parametrix, Inc. 1996. Blaine Harbor Moorage Expansion and Dredging Project. Mitigation study area surveys. Prepared for the Port of Bellingham, Bellingham, Washington.

Palsson, W.A., T. Tsou, G.G. Bargmann, R.M. Buckley, J.E. West, M.L. Mills, Y.W. Cheng, and R.E. Pacunski. 2009. The Biology and Assessment of Rockfishes in Puget Sound. Washington Department of Fish and Wildlife. September 2009.

Port of Anacortes. 2004. Project Pier 1: juvenile salmon diet and use. Prepared by Grette Associates for the Port of Anacortes, Washington. January 20, 2004.

Ralph, C.J., G.L. Hunt, Jr., and J.F. Piatt (technical editors). 1995. Ecology and conservation of the marbled murrelet. Albany, CA: U.S. Department of Agriculture, Forest Service, Pacific Southwest Research Station. Gen. Tech. Rep. PSW-GTR-152.

Reeves, R.R. and S. Leatherwood. 1994. Dolphins, porpoises, and whales: 1994-1998 action plan for the conservation of cetaceans. IUCN, Gland, Switzerland.

Rieman, B.E. and J.D. McIntyre. 1993. Demographic and Habitat Requirements for conservation of Bull Trout. Gen. Tech. Rep. INT-302. Ogden, UT: U.S. Department of Agriculture, Forest Service, and Intermountain Research Station. Boise, Idaho. 38p.

Rieman, B.E. and J.D. McIntyre. 1995. Occurrence of bull trout in naturally fragmented habitat patches of varied size. Transactions of the American Fisheries Society 124: 285-296.

Scheffer, V.B. and J.W. Slipp. 1948. The whales and dolphins of Washington State with a key to the cetaceans of the west coast of America. Am. Midl. Natur. 39(2):257-337.

Stober, Q. J., and E. O. Salo. 1973. Ecological studies of the proposed Kiket Island nuclear power site. Snohomish County P.U.D. and Seattle City Light. FRI-UW-7304.

Tyler, R.W. 1964. Distribution and migration of young salmon in Bellingham Bay, Washington. University of Washington, Fisheries Research Institute. Circular No. 212. Seattle, Washington.

Tyler, R.W. and D.E. Bevan. 1964. Migration of juvenile salmon in Bellingham Bay, Washington. Research in Fisheries, 1963. University of Washington, College of Fisheries. Contribution No. 166. Seattle, Washington.

U.S. Army Corps of Engineers (USACE). 2000. Programmatic Biological Evaluation, Marbled Murrelet and Bull Trout, Puget Sound Dredged Disposal Analysis (PSDDA) Non-Dispersive Disposal Sites. Seattle, Washington.

U.S. Fish and Wildlife Service (USFWS). 1992. Endangered and Threatened Wildlife and Plants: Determination of Threatened Status for the Washington, Oregon, and California Population of the Marbled Murrelet. Federal Register, Volume 57, Number 191: 45328-45337. October 1, 1992.

U.S. Fish and Wildlife Service (USFWS). 1995. Draft recovery plan for the marbled murrelet (*Brachyramphus marmoratus*). U.S. Fish and Wildlife Service, Portland, Oregon.

U.S. Fish and Wildlife Service (USFWS). 1996. Endangered and Threatened Wildlife and Plants; Final Designation of Critical Habitat for the Marbled Murrelet. 50 CFR Part 17. RIN 1018–AC33. May 24, 1996.

U.S. Fish and Wildlife Service (USFWS). 1997. Recovery plan for the threatened marbled murrelet (*Brachyramphus marmoratus*) in Washington, Oregon, and California. Portland, Oregon. 203 pp.

U.S. Fish and Wildlife Service (USFWS). 1999. Endangered and threatened wildlife and plants: determination of threatened status for bull trout in the coterminous United States. Final Rule. Federal Register, Volume 64, Number 210: 58910. November 1, 1999.

U.S. Fish and Wildlife Service (USFWS). 2005. Endangered and Threatened Wildlife and Plants; Designation of Critical Habitat for the Bull Trout. Federal Register, Volume 70, Number 185: 56212-56311. September 26, 2005.

U.S. Fish and Wildlife Service (USFWS). 2013. Listed and Proposed Endangered and Threatened Species and Critical Habitat, Candidate Species, and Species of Concern in Skagit County. http://www.fws.gov/.

Washington Department of Fish and Wildlife (WDFW). 2012. Priority Habitats and Species List by County, 2012. Available http://wdfw.wa.gov/publications/00165/2012_distribution_by_county.xls

Washington Department of Fish and Wildlife (WDFW). 2013. *SalmonScape* on-line GIS salmonid distribution mapper. Queried August 21, 2013.

Weitkamp, D.E. and R.F. Campbell. 1980. Port of Seattle Terminal 107 Fisheries Study. Port of Seattle, Planning and Research Department. Seattle, Washington.

Weitkamp, D.E. and T.J. Schadt. 1982. Juvenile chum and chinook salmon behavior at Terminal 91, Seattle, Washington. Port of Seattle, Document No. 82-0415-013F. Seattle, Washington.

Wetherall, J. A. 1971. Estimation of survival rates for chinook salmon during their downstream migration in the Green River, Washington. M.S. thesis, University of Washington, Seattle, WA.

# PORT OF ANACORTES – CURTIS WHARF PUMP OUT FACILITY/ELECTRIFICATION PROJECT

## PERMIT DRAWINGS

# PORT OF ANACORTES – CURTIS WHARF PUMP OUT FACILITY/ELECTRIFICATION PROJECT

## APPENDIX A: ESSENTIAL FISH HABITAT ASSESSMENT

# PORT OF ANACORTES – CURTIS WHARF PUMP OUT FACILITY/ELECTRIFICATION PROJECT

# ESSENTIAL FISH HABITAT ASSESSMENT

PREPARED FOR:

**PORT OF ANACORTES**
100 COMMERCIAL AVENUE
ANACORTES, WA 98221

PREPARED BY:

**GRETTE ASSOCIATES,** A DIVISION OF FARALLON CONSULTING
151 SOUTH WORTHEN, SUITE 101
WENATCHEE, WASHINGTON 98801
(509) 663-6300

2709 Jahn Ave NW, STE H5
GIG HARBOR, WASHINGTON 98335
(253) 573-9300

FEBRUARY 2025

# 1. BACKGROUND

Pursuant to the Magnuson-Stevenson Fishery Conservation Management Act (MSFCMA) and the 1996 Sustainable Fishery Act, an evaluation of impacts of the Port of Anacortes – Curtis Wharf Pump out Facility/Electrification Project on Essential Fish Habitat (EFH) is necessary. EFH is defined by the MSFCMA in 50 CFR 600.905-930 as "those waters and substrate necessary to fish for spawning, breeding, feeding, or growth to maturity." The Pacific Fisheries Management Council (PFMC) has designated EFH for the Pacific salmon fishery, federally managed ground fishes, and coastal pelagic fishes (NOAA Fisheries 1999, PFMC 1999).

In Washington, EFH for the Pacific salmon fishery includes all those streams, lakes, ponds, wetlands and other water bodies currently or historically accessible to Chinook (*Oncorhynchus tshawytscha*), coho (*Oncorhynchus kisutch*), and pink salmon (*Oncorhynchus gorbuscha*), except above impassible barriers (PFMC 1999). In estuarine and marine areas, designated EFH for Chinook, coho and pink salmon extends from nearshore and tidal submerged environments within state territorial waters out to the full extent of the Exclusive Economic Zone (EEZ) off the Washington coast (PFMC 1999).

The EFH designation for ground fishes and coastal pelagics includes those waters and substrates necessary to ensure the production needed to support a long-term sustainable fishery. Ground fish and coastal pelagic EFH within marine waters of Washington also extends from the nearshore and tidal submerged environment out to the EEZ.

The west coast ground fish management unit includes 83 species that typically live on or near the bottom of the ocean. Species groups include skates and sharks, rockfishes, flatfishes and ground fishes. Coastal pelagics are schooling fishes that migrate in coastal waters. West coast pelagics include the pacific sardine (*Sardinops sagax*), Pacific chub (*Scomber japonicus*), northern anchovy (*Engraulis mordax*), jack mackerel (*Trachurus symmertircus*) and market squid (*Loligo opalescens*).

The objective of this EFH assessment is to determine whether or not the new improvements to Curtis Wharf "may adversely affect" designated EFH for relevant commercially, federally-managed fisheries species within the proposed Action Area. It also described conservation measures proposed to avoid, minimize or otherwise offset potential adverse effects to designated EFH associated with the Action Area.

# 2. ESSENTIAL FISH HABITAT ANALYSIS

## 2.1 ESSENTIAL FISH HABITAT WITHIN THE ACTION AREA

Salmonid, groundfish, and pelagic species and life-stages with designated EFH in Puget Sound estuaries that may be present in the Action Area are listed in Table 1, below.

**Table 1. Fish species and life-stages with designated essential fish habitat in Puget Sound**

| Guild / Common Name | Species Name | Adults | Eggs | Juveniles | Larvae |
|---|---|---|---|---|---|
| **Groundfish[1]** | | | | | |
| Big skate | *Raja binoculata* | x | x | x | |
| Black rockfish | *Sebastes melanops* | x | | x | |
| Blue rockfish | *Sebastes mystinus* | x | | x | x |
| Bocaccio | *Sebastes paucispinis* | x | | x | x |
| Brown rockfish | *Sebastes auriculatus* | x | | x | |
| Butter sole | *Isopsetta isolepis* | x | x | x | x |
| Cabezon | *Scorpaenichthys marmoratus* | x | x | x | x |
| China rockfish | *Sebastes nebulosus* | x | | x | |
| Copper rockfish | *Sebastes caurinus* | x | | x | |
| Dover sole | *Microstomus pacificus* | x | x | x | x |
| English sole | *Parophrys vetulus* | x | x | x | |
| Flathead sole | *Hippoglossoides elassodon* | x | | x | |
| Greenstriped rockfish | *Sebastes elongatus* | x | | x | x |
| Kelp greenling | *Hexagrammos decagrammus* | x | x | x | x |
| Lingcod | *Ophiodon elongatus* | | | x | x |
| Longnose skate | *Raja rhina* | x | x | x | |
| Pacific cod | *Gadus macrocephalus* | x | | | |
| Pacific hake | *Merluccius productus* | x | | x | |
| Pacific sanddab | *Citharichthys sordidus* | x | x | x | x |
| Petrale sole | *Eopsetta jordani* | x | | x | |
| Quillback rockfish | *Sebastes maliger* | x | | x | x |
| Redstripe rockfish | *Sebastes proriger* | x | | x | x |
| Rex sole | *Glyptocephalus zachirus* | x | | x | |
| Rock sole | *Lepidopsetta bilineata* | x | x | x | x |
| Sablefish | *Anoplopoma fimbria* | x | x | x | x |
| Sand sole | *Psettichthys melanostictus* | x | x | x | x |
| Spiny dogfish | *Squalus acanthias* | x | | x | |
| Splitnose rockfish | *Sebastes diploproa* | x | | x | x |
| Spotted ratfish | *Hydrolagus colliei* | x | x | x | |
| Starry flounder | *Platichthys stellatus* | x | x | x | x |
| Tiger rockfish | *Sebastes nigrocinctus* | x | | x | x |
| Widow rockfish | *Sebastes entomelas* | x | | x | x |
| Yelloweye rockfish | *Sebastes ruberrimus* | x | | | x |
| Yellowtail rockfish | *Sebastes flavidus* | x | | x | |

| Guild / Common Name | Species Name | Adults | Eggs | Juveniles | Larvae |
|---|---|---|---|---|---|
| **Pacific Salmon**[2] | | | | | |
| Chinook | *Oncorhynchus tshawytscha* | x | | x | |
| Coho | *Oncorhynchus kisutch* | x | | x | |
| Puget Sound pink | *Oncorhynchus gorbuscha* | x | | x | |
| **Coastal Pelagics**[2] | | | | | |
| Northern anchovy | *Engraulis mordax* | x | x | x | x |
| Pacific sardine | *Sardinops sagax caerulea* | x | | | |
| Pacific mackerel | *Scomber japonicus* | x | | | |
| Market squid | *Loligo opalescens* | x | | | |

[1] Based on information from EFH database provided by J. Stadler (NFMS) dated January 16, 2007.
[2] Based on previously published Puget Sound EFH lists from NFMS used in EFH Assessments through 2006.

All three of the Pacific salmon management unit species (chinook, coho and pink salmon) may be present within the Project Action Area (WDFW 2013). However, spawning and rearing of these species does not occur in the Action Area. The nearest streams with salmon spawning and rearing are approximately 13 miles away (WDFW 2013). Therefore, all three salmonid species may use the Action Area for adult migration and juvenile out-migration.

Many of the ground fish species that occur in Puget Sound may also occur within the Action Area. West coast pelagic fishes are primarily associated with open ocean and coastal areas (PFMC 1998) and are therefore not likely to occur within the Action Area.

## 2.2 Description of the Proposed Action

Detailed descriptions of proposed Project activities may be found in Section 2.2 of the No Effects Evaluation. The potential for impacts to designated EFH within the Action Area is primarily associated with the impact on habitat, water quality, and prey assemblages associated with the new installations to Curtis Wharf.

**Table 2. Affected EFH by Project element and proposed conservation measures**

| Project Element | Affected EFH | Impact Mechanism | Applicable Conservation Measures (see list below) |
|---|---|---|---|
| **Curtis Wharf Improvements** | Groundfish, pelagic and salmonid EFH (Waters) | The proposed project will install a blackwater pump and shore power pedestals. Installation will include supporting sanitary sewer force mains and electric conduits. All construction activities will occur by hand.<br>There is a discountable potential for an unintentional release of fuel from the construction vessel that could lead to adverse impacts to the water column EFH. | 1 (for salmonid EFH only), 2, 3, 4, 5, 6, 7, 8, and 9 |
| | Groundfish, pelagic and salmonid EFH (Substrate) | The proposed project does not have the potential to disturb existing substrates and will not result in the increase of overwater coverage. Any sessile invertebrate and marine algae attached to the bottom of the dock would be displaced by the installation of the hangars. However, it is unlikely that any such organisms are present there. If present, their removal would have no appreciable effect on EFH. | 1 (for salmonid EFH only), 2, 3, 4, 5, 6, 7, 8, and 9 |

List of Applicable Conservation Measures

1. Timing restrictions specifying that in-water work must occur when juvenile salmonids are absent or present in very low numbers. Anticipated to be July 16 to February 15 (Tidal Area 9). This does not apply to work conducted on top of the wharf deck.
2. Compliance with permit conditions.
3. There are no proposed changes in use, size, layout, or footprint of Curtis Wharf.
4. All construction activities will occur above the water's surface; no in-water work is proposed. All work would either be underneath the wharf from a small skiff or work float, around the bull rail of the wharf from a small skiff or work float, or on surface the wharf itself.
5. Small hand tools such as wrenches, pliers, cutters, files, hammered tools, screwdrivers, vises, clamps, snips, shims, saws, drills, etc. will be used to complete the above-water repair work to avoid possible impacts from in-air and in-water noise
6. All equipment and materials will be carried along Curtis Wharf by hand, dock cart, or small skiff/float.
7. Replacement materials shall be produced and/or fabricated at an appropriate upland facility prior to delivery to the marina
8. Any replacement material will be cut, treated, drilled, and shaped as much as practical off site. Any on-site carpentry work shall be conducted upland before the material is hand carried onto docks for installation.
9. All removed materials from docks will be carried upland and transported and disposed of appropriately.

As designed, the proposed project is not anticipated to result in any adverse impacts to designated EFH within the Action Area. The proposed Project will not result in any increase in size, configuration, or use of the existing dock. All of the construction will occur using hand tools above the water with no mechanisms to adversely impacts existing EFH.

### 2.3 POTENTIAL ADVERSE EFFECTS OF THE PROJECT

This assessment of whether proposed Project activities may adversely affect designated EFH within the Action Area is based on information in the documents referenced above (NMFS 1998; PFMC 1998a, 1998b, 1999).

There are no identified primary elements of the Project that could potentially impact designated EFH. In order to ensure this, Conservation Measures will be implemented to avoid and minimize impacts (summarized in Table 2, above). Details about all potential Project impacts on species of concern may be found in Section 5 of the No Effects Evaluation.

# 3. CONCLUSIONS AND DETERMINATION OF EFFECTS

## 3.1 SALMONID EFH

The impacts of the Project on salmonid habitat are shown in Table 2. The proposed Project will have no potential for generating turbidity and there is essentially no potential for spills since the only equipment used that could impact water column EFH would be a work skiff. The proposed Project has no potential to adversely impact epibenthic communities. Overall, the Project will have ***no effect*** on salmonid EFH.

## 3.2 GROUNDFISH EFH

The impacts of the Project on groundfish EFH are shown in Table 2. The proposed Project will have no potential for generating turbidity and there is essentially no potential for spills since the only equipment used that could impact water column EFH would be a work skiff. The proposed Project has no potential to adversely impact epibenthic communities. Overall, the Project will have ***no effect*** on groundfish EFH.

## 3.3 COASTAL-PELAGIC EFH

The impacts of the Project on groundfish EFH are shown in Table 2. The proposed Project will have no potential for generating turbidity and there is essentially no potential for spills since the only equipment used that could impact water column EFH would be a work skiff. The proposed Project has no potential to adversely impact epibenthic communities. Overall, the Project will have ***no effect*** on coastal-pelagic EFH.

## 4. REFERENCES CITED

National Marine Fisheries Service (NMFS). 1998. Essential Fish Habitat West Coast Groundfish Appendix. NMFS, Seattle, Washington.

Pacific Fishery Management Council (PFMC). 1998a. The Pacific Coast Groundfish Fishery Management Plan. Pacific Fishery Management Council, Portland, Oregon.

Pacific Fishery Management Council (PFMC). 1998b. Coastal Pelagics Fishery Management Plan. Pacific Fishery Management Council, Portland, Oregon.

Pacific Fishery Management Council (PFMC). 1999. Appendix A. Identification and Description of Essential Fish Habitat, Adverse Impacts, and Recommended Conservation Measures for Salmon. Pacific Fishery Management Council, Portland, Oregon.

Washington Department of Fish and Wildlife (WDFW). 2013. *SalmonScape* on-line GIS salmonid distribution mapper. Queried August 29, 2013.

GeoEngineers
554 West Bakerview Road
Bellingham, Washington 98226
360.647.1510

PCED Received
Date: 02/05/2025
Document received by the Planning, Community & Economic Development Department

December 3, 2024

Port of Anacortes
100 Commercial Avenue
Anacortes, Washington 98221

Attention: Samantha Karpa, P.E.

Subject: Letter Report
Limited Geotechnical Engineering Services
Curtis Wharf Pump Out
Anacortes, Washington
File No. 5147-034-00

GeoEngineers, Inc. (GeoEngineers) is pleased to present this letter report to provide limited geotechnical engineering services for the proposed Curtis Wharf Pump Out project within Curtis Wharf near the intersection of O Avenue and Railroad Avenue in Anacortes, Washington. We understand the Port of Anacortes (Port) is planning to install new pump out equipment on Curtis Wharf that includes a new force main hung from existing pier as well as a shallow buried portion that connects to a flow meter and a 4-foot inside diameter manhole along with approximately 55 linear feet of gravity sewer line that connects to an existing manhole at the intersection of O Avenue and Railroad Avenue. Our proposed scope of services is based on conversations with you and our experience in the project vicinity. Our services were completed in accordance with our proposal for the project dated June 28, 2024, and authorized by Kennedy Jenks on October 18, 2024.

We previously completed explorations as part of the Quiet Cove hydrogeologic investigation in addition to a Data Report for Port of Anacortes, Job Development Fund Infrastructure Improvements, dated October 2, 2008; these explorations included borings nearby the proposed project area.

## Geology

U.S. Geological Survey (USGS) map for the project area, “Geologic Map of the Bellingham 1:100,000 Quadrangle, Washington” (Lapen 2000), shows soils in the vicinity of the site include both glacial and non-glacial processes that have occurred during the last 12,000 years. Surface soil deposits are identified as artificial fill and nearby as recessional marine (glaciomarine) drift from the Everson interstade of the Fraser glaciation.

Glaciomarine drift (GMD) consists of unsorted, unstratified silt and clay with varying amounts of sand, gravel, cobbles, and occasional boulders. Glaciomarine drift is derived from sediment melted out of floating

glacial ice that was deposited on the sea floor. This material contains shells, wood, and large erratics (very large boulders) that can be present sporadically or even in a large cluster. The upper 5 to 15 feet of this unit in upland areas is typically stiff to very stiff. This is generally attributed to desiccation, although some consolidation from ice contact loading may have occurred. The stiff layer possesses relatively high shear strength and low compressibility characteristics. The stiff layer typically grades with depth to medium stiff or even soft, gray, clayey silt or clay with varying amounts of sand and gravel. In contrast to the upper portion of this unit, the medium stiff to soft glaciomarine drift possesses relatively low shear strength and moderate to high compressibility characteristics.

# Site Conditions

## SURFACE CONDITIONS

The site conditions consist of an industrial area. The northern half is a wharf built out over the Guemes Channel; the southern portion has a large seafood processing structure. Utilities are located along the perimeter of the site including natural gas, water, storm and power. The site is relatively level at the ground surface ranging from approximately Elevation 14 feet to 16 feet. Beyond the roadway the shoreline slopes down from the roadway to the water. The site is over water in the north of the site and the southern extent of the site is approximately60 feet from the shoreline.

## REVIEW OF EXISTING INFORMATION

We reviewed the following documents from projects completed by GeoEngineers and others within the project limits and general vicinity:

- Technical Memorandum, “Hydrogeologic Evaluation, Quiet Cove Property, Anacortes, Washington,” prepared for Washington State Department of Ecology by GeoEngineers, Inc., August 1, 2018.
- Geotechnical Data Report, “Port of Anacortes, Job Development Fund Infrastructure Improvements, Anacortes, Washington,” prepared for Leonard Boudinot and Skodje, Inc by GeoEngineers, Inc., October 2, 2008.

The relevant logs of explorations and laboratory/field testing from previous projects referenced for this study are presented in Appendix A, and approximate locations of the explorations are shown in Figure 2.

## SUBSURFACE CONDITIONS

### *Soil Conditions*

The soils encountered at the site consist of relatively shallow fill overlying glaciomarine drift soils. Some of the borings encountered layers of organic soils within the fill.

- The explorations encountered various thicknesses of surface materials. GEI-31, GEI-32, GEI-35 and GEI-37 encountered 6 inches of asphalt concrete. GEI-36 encountered 3 inches of asphalt concrete. B-1 and B-2, which were completed in 2008, encountered 1 to 3 inches of asphalt overlying 8 inches of concrete. MW-7 was completed in an area surfaced with crushed rock gravel.

- The fill observed in the explorations typically consisted of fine to coarse sand with gravel with trace organics. Thin silt layers were observed in GEI-32, GEI-35 and GEI-37. The thickness of fill encountered in the explorations ranged up to approximately 1 to 7 feet. The thickness, composition and density of the fill varied across the site.
- Native soils were encountered below the fill which is interpreted to be beach deposits. The beach deposits more typically consisted of loose to medium dense sand with varying amounts of silt and gravels. This unit extends to the depths explored.

### *Groundwater Conditions*

Groundwater at the time of explorations was encountered in all of the borings. Groundwater was observed at approximately 5.5 feet to 9 feet below ground surface (bgs) across all borings. As part of the groundwater study of the Quiet Cove Site, groundwater levels in MW-7 were evaluated for tidal influence and hydraulic conductivity. MW-7 was determined to be tidally influenced with a lag time of 2.4 hours and a peak observed elevation of approximately 7 feet NAVD88 in November 2017.

Based on our observations, groundwater at the site is expected to fluctuate with changes in tides, by season, precipitation, and other factors.

### *Environmental Conditions*

The property west of the site is currently owned by the Port and is undergoing a remedial investigation under a Washington State Department of Ecology (Ecology) Agreed Order. Historically, this property operated a bulk fueling facility with above ground storage tanks (ASTs), pump house, garage/warehouse and office space. Preliminary environmental investigations have identified petroleum hydrocarbons (gasoline, diesel and heavy oil) and volatile organic compounds (VOCs) in soil and groundwater exceeding regularity cleanup levels. Site characterization activities for this property are being performed to further define nature and extent of this contamination and are still ongoing.

## Conclusions and Recommendations

### GENERAL

We understand that new pump out equipment on Curtis Wharf includes several components including: a new force main hung from existing pier; a shallow buried force main; a flow meter vault, a new manhole and new gravity sewer line that connects to an existing manhole at the intersection of O Avenue and Railroad. We conclude that the site is suitable for the proposed pump out equipment using conventional construction techniques. Some of the site soils are very sensitive to moisture and over the optimum moisture content; therefore, it is important that subgrade preparation occur during periods of dry weather to be able to prepare the subgrade properly while minimizing construction costs. Subgrade soils with higher fines contents will be susceptible to subgrade softening from surface water. Repeated heavy wheel loads during wet conditions would disturb the subgrade and result in rutting.

### BELOW-GRADE STRUCTURE SUPPORT

We anticipate the manhole and flow meter vault structures will typically be supported in loose to medium dense fill and sandy beach deposits. Care should be taken to prevent disturbance of subgrade soils prior

to placement of the foundation material and structure on the excavated subgrade, especially where soft silt or clay soil layers are encountered. It is our opinion that undisturbed native soils and most existing fill soils will generally provide adequate support for the new structures, although some unsuitable foundation soils may be encountered. If very soft silt/clay soil or highly organic soil is encountered at the base of the structure, additional overexcavation and foundation preparation should be completed, as discussed below.

We recommend a net allowable bearing capacity of 1,500 pounds per square foot (psf). Given the loose soil anticipated at the foundation subgrade, we recommend planning for and providing a minimum 24-inch thick layer of foundation material as described in this report as a leveling pad and to provide uniform support for all below-grade structures. We recommend placing a woven geotextile fabric for soil stabilization (WSDOT Standard Specification 9-33.2[1], Table 3) over the subgrade prior to placing the foundation material. A fully dewatered excavation will be required to create a stabilized base, as discussed in the Construction Dewatering section below.

### *Foundation Material*

Where foundation material is necessary, we recommend that it consist of crushed rock such as ¾- to 1¼-inch crushed surfacing base course (CSBC) (WSDOT Standard Specification 9-03.9[3]) or permeable ballast (WSDOT Standard Specification 9-03.9[2]). The interlocking of this size angular rock will provide strength for bearing capacity and will also limit intrusion of the subgrade soils into the void space (better than larger-sized rock). The foundation material should be compacted to a uniformly firm condition with a plate compactor or similar equipment. We recommend that a representative of GeoEngineers observe the excavation and subgrade conditions and evaluate the requirements for overexcavation and replacement prior to placing the foundation material.

## PIPE DESIGN CONSIDERATIONS

The proposed project includes new piping for a force main and new gravity sewer. The following sections provide recommendations for the proposed improvements.

### *Pipe Subgrade Support*

We understand that the force main piping will be buried approximately 3 feet below existing site grade and that the gravity line will have an invert at approximately up to 5 feet below existing site grades. The soils at the subgrade level for new piping are anticipated to consist of predominantly granular fill or beach deposits, although some fine-grained silt or clay may also be encountered. In general, most previously placed fill and the beach deposits will provide adequate support for proposed piping throughout the site. Because of the geologic environment, and based on the site explorations, it is possible that some organic soils or other deleterious material could be encountered at or near the pipe subgrade. If the subgrade soils are organic, become disturbed, or are otherwise unsuitable, it may be necessary to over-excavate the unsuitable material and backfill with foundation material or additional pipe bedding as discussed below. We anticipate that the force main will be installed above the water table. The proposed gravity line may encounter groundwater within excavation depths depending on the time of year and tides and dewatering will likely be required as discussed subsequently in this report. Where dewatering is necessary, we recommend that the water level be drawn down at least 2 feet below the base elevation of the pipe to create a stable subgrade.

### *Pipe Bedding and Foundation Material*

Bedding material should comply with the engineer's or pipe manufacturer's recommendations, WSDOT Standard Specifications, or project specifications, as appropriate.

- Pipe bedding should meet the gradation requirements for Gravel Backfill for Pipe Zone Bedding Per WSDOT Standard Specification 9-03.12(3), or manufacturers specifications.
- Pipe bedding material should be used as backfill up to at least 6 inches above the top of the pipe. Prior to the installation of the pipe, the pipe bedding should be shaped to fit the lower part of the pipe exterior with reasonable closeness to provide continuous support along the pipe.
- Pipe bedding material and/or backfill around the pipe should be placed in layers and tamped around the pipe to obtain complete contact per the project plans. In areas where a trench box is used, the bedding material should be placed before the trench box is advanced.

Where the base of the excavation encounters soft, organic, or otherwise unstable soils, we recommend overexcavation up to 2 feet or as directed by the field engineer, and stabilization with additional pipe bedding or foundation material described previously in Pipe Subgrade Support.

### *Structural and Trench Backfill*

We recommend that trench backfill consist of structural fill as described in the Earthwork section of this report. The suitability of the native, on-site material as structural fill is discussed in the same section. During placement of the initial lifts, the backfill material should not be bulldozed into the trench or dropped directly on the pipe. Furthermore, heavy vibratory equipment should not be permitted to operate directly over the pipe until a minimum of 2 feet of backfill has been placed. Backfill should be placed in lifts to achieve the required compaction using the mechanical equipment chosen by the contractor.

### *Pipe Settlement and Differential Movement*

The likely mechanisms for pipe settlement include poor bearing support immediately below the pipe, consolidation of underlying compressible soils, and liquefaction induced settlement. Provided pipe subgrade and trench backfill is completed as recommended, we estimate that the post-construction settlement will be 1-inch or less.

The design and construction procedures discussed in this report will not mitigate the possible liquefaction effects and associated damage to the utilities caused by earthquake induced differential settlements. Infrastructure supported by or within liquefiable zones is at higher risk; however, oftentimes buried pipes will move with the soil and not experience significant damage.

In order to minimize the risk of potential damage from liquefaction from a large design-level event, it would be necessary to support the utilities on piles or improve the ground such that the soils below the pipe corridor do not liquefy. This is typically cost prohibitive for pipeline projects. An alternate method would be to include restrained joints (which allow movement but not separation) and flexible connections at these risk areas. It may not even be practical/possible to completely mitigate the large-scale differential movements from a large design seismic event; however, some flexibility will provide resistance to smaller earthquakes and better performance.

## EARTHWORK

### *Excavation Considerations*

Excavations will be required for installation of manhole structures, flow meter vault, and associated piping. The excavations will extend through historic fill material and beach deposits. Soil conditions will be variable depending on the units encountered. Excavation of these soils can be completed using conventional earthwork equipment. Larger horsepower excavators will be more efficient for excavating if large cobbles, boulders, or construction debris are encountered in the fill soils.

As noted, water level onsite fluctuates seasonally and tidally. The majority of the excavations will occur above the groundwater as the level observed was at approximately 5½ feet bgs in November 2017 (Elevation 7 feet NAVD88) in MW-7. The recommendations below apply only to soils above groundwater. Excavations below groundwater will require temporary dewatering as described in a section below.

### *Temporary Slopes*

Regardless of the soil type encountered in the excavation, either shoring, trench boxes or sloped sidewalls will be required for excavations deeper than 4 feet under Washington State Administrative Code (WAC) 296-155, Part N. We expect that the excavations will be made as open cuts in conjunction with the use of a trench box and/or sloped sidewalls for shielding workers. Based on our explorations, all site soils would be classified as “Type C” and allow maximum 1.5H:1V temporary slopes.

The above regulations assume that surface loads such as construction equipment and storage loads will be kept a sufficient distance away from the top of the cut so that the stability of the excavation is not affected. Flatter slopes, shoring and/or dewatering will be necessary for those portions of the excavations which are subjected to significant seepage in order to maintain the stability of the cut. Temporary slopes in wet/saturated sand will be susceptible to sloughing, raveling and “running” conditions. It should be expected that unsupported cut slopes will experience some sloughing and raveling if exposed to surface water. Berms or other provisions should be installed along the top of the excavation to intercept surface runoff to reduce the potential for sloughing and erosion of cut slopes during wet weather.

In our opinion, the contractor will be in the best position to observe subsurface conditions continuously throughout the construction process and to respond to the soil and groundwater conditions. Construction site safety is generally the sole responsibility of the contractor, who also is solely responsible for the means, methods, and sequencing of the construction operations and choices regarding temporary excavations and shoring. We are providing this information only as a service to our client. Under no circumstances should the information provided below be interpreted to mean that GeoEngineers, Inc. is assuming responsibility for construction site safety or the contractor’s activities; such responsibility is not being implied and should not be inferred.

### *Temporary Shoring – Trench Boxes*

For shallower excavations, we recommend that a shoring system be used where excavations are located adjacent to private property, existing utilities, roadways, or infrastructure where soil movement or ground loss could result in damage to these facilities. Generally, a trench box is not considered appropriate in areas where soil movement adjacent to the trench is unacceptable. Typically, a trench box is used to protect workers from injury should the sidewall collapse. If a sidewall collapses, a contractor typically will backfill

the void space in the trench box to the extent practical. Upon completion of the work the contractor will then pull the trench box out and the sidewalls cave and surface distress or disruption occurs.

A trench box can be used where sidewall support is required provided that it is: (1) designed for anticipated earth pressures; (2) the trench area is dewatered; and (3) the installation, moving and backfilling can be accomplished in such a manner that significant yielding does not occur. Braced or unbraced shoring (several types of adjustable braced trench shoring systems are available) and slide-rail systems of various types could be used where protection of existing slopes or structures is necessary and may be appropriate for the manhole excavations.

If a trench box is used and the soils are dewatered below the base of the excavation (prior to excavation), yielding/movement of the sidewalls is unlikely to occur beyond a 1.5H:1V slope as measured from the bottom of the excavation. If the soils are not dewatered to at least 2 feet below the bottom of the trench prior to and during excavation as recommended, the area of disturbance could be significantly greater. The following should be implemented for the shoring systems for the project:

- At locations where settlement could be detrimental to adjacent structures, utilities, or pavements, the shoring system should be designed to prevent significant lateral movement of the existing soils.
- Precautions should be taken during removal of the shoring or sheeting materials to minimize disturbance of the pipe, underlying bedding materials, and existing soils.
- Trench boxes should be of sufficient size, both vertically and horizontally, to support the excavation without excessive deformation of the natural soils.
- The open excavations should be backfilled as soon as practical after the shoring has been removed.
- Heavy construction equipment, construction materials, and excavated soil should not be allowed within a distance, measured from the edge of the excavation, equal to half the depth of the excavation, unless the shoring system has been designed for the additional lateral pressure.

### *Subgrade Preparation*

The sitework generally consists of trenching or small excavations for manholes and flow meter vault. We expect that the work will be completed from existing paved surfaces. Historical fill soils, where exposed at subgrade surfaces, may be susceptible to disturbance by construction equipment during wet weather. In isolated areas, overexcavation of subgrade soils and replacement with structural fill as described below may be appropriate to support construction traffic during wet weather construction.

In general, subgrade preparation should consist of the following:

- Non-yielding condition of the subgrade for at-grade construction elements can be confirmed by compacting the subgrade, which should be observed by one of our geotechnical engineers, who will evaluate the subgrade and make recommendations for overexcavation and/or remediation where necessary.
- If soft or otherwise unsuitable areas are observed during compaction and/or probing, excavation to firm soil or to 2 feet below the original ground surface, or as otherwise recommended by the geotechnical engineer's representative, should be accomplished. The overexcavated material should be replaced with structural fill in accordance with recommendations provided below.

## *Structural Fill*

At a minimum, we recommend that structural fill for general backfill consist of non-plastic soil meeting the WSDOT Standard Specifications for Gravel Borrow, Section 9-03.14(1). We also recommend select import fill be used as backfill within 2 feet of the ground surface in paved areas where compaction to 95 percent of the maximum dry density (MDD) per ASTM International (ASTM) D1557 is required as discussed below.

### SUITABILITY OF ON-SITE MATERIALS

Soils above the groundwater consist of uncontrolled fill soils comprised predominantly of granular sand and gravel with variable fines content (SP-SM, SP). Granular sand soils can be adequately compacted to at least 90 percent of MDD in most instances and are suitable for use as structural fill during periods of dry weather if they are moisture conditioned to near optimum. As the fines content increases in these materials they become more sensitive to changes in moisture content and may not be suitable for use if placed during wet weather. Soils excavated from below the groundwater table have moisture contents well above optimum that will not be suitable for reuse as structural fill without moisture conditioning.

While the onsite soils may be generally considered suitable for reuse as structural fill, due to the limited scope of the project, for planning and cost estimating purposes we recommend that imported structural fill be utilized for backfill. Additionally, compaction of mixed soils to a specific density standard is much more difficult for trench backfill, especially when the soils are wet/over optimum moisture content.

Fill soils with high silt contents, if encountered, are very moisture sensitive and can be difficult to compact to above 90 percent of the MDD even at or near their optimum moisture content; therefore, soils with very high fines content should not be reused as structural fill. Some segregation of this less suitable material may be necessary during excavation.

We anticipate that the soils excavated from the manhole excavation will be saturated and not suitable for reuse as structural fill.

### SELECT IMPORT FILL

If wet weather or the moisture content precludes the use of onsite materials as structural fill, we recommend using a select import fill to complete the backfilling site excavations. The select import fill should consist of sand and gravel with a fines content less than 5 percent based on that portion passing the ¾-inch sieve. A suitable WSDOT Standard Specifications would include Gravel Borrow (9-03.14), with the fines content limited as noted.

### FILL PLACEMENT AND COMPACTION

Structural fill should be placed in 8- to 12-inch loose lifts, or that thickness necessary to achieve the required compaction using the mechanical equipment chosen by the contractor. We recommend that the MDD be determined based on ASTM D 1557.

Table 1 below provides a summary of recommended imported structural fill materials and compaction standards.

### TABLE 1. SUGGESTED FILL MATERIAL COMPACTION AND SPECIFICATION

| FILL AREA | COMPACTION | SUGGESTED SPECIFICATION |
|---|---|---|
| Structural fill below structures | 95% MDD | WSDOT Gravel Borrow 9-03.14(1) with minimum 30 percent on U.S No. 4 sieve; or WSDOT Crushed Surfacing 9-03.9(3) |
| Structural fill below pavements, driveways, and sidewalk | 90% MDD except 95% in upper 2 feet below pavement section | WSDOT Gravel Borrow 9-03.14(1) or WSDOT Aggregate for Gravel Base 9-03.10 |
| Gravel base for pavement | 95% MDD | WSDOT Aggregate for Gravel Base 9-03.10 |
| Crushed surfacing base/top course | 95% MDD | WSDOT Crushed Surfacing 9-03.9(3) |

## CONSTRUCTION DEWATERING

As currently planned, the excavations will be limited to utility installation at depths less than 5 feet. Therefore, based on the soil conditions encountered we expect that perched groundwater or rainwater may accumulate in excavations. The proposed excavations may require dewatering with open pumping. This dewatering method involves removing water that has seeped into the excavation by pumping from a sump that has been excavated at one end of the excavation or trench (or a series of sumps along a trench). In our opinion, passive open pumping methods are likely an adequate dewatering method for this project.

If excavations extend below the groundwater level, and only need to be lowered by 1 to 2 feet, open pumping may still be feasible. However, if the groundwater level is required to be lowered by more than 2 feet, we expect that more aggressive dewatering methods such as vacuum wellpoints will be required. Construction should be planned during periods of dry weather when groundwater will be lowest.

### *Wet Weather Earthwork*

In addition to the wet weather considerations discussed previously in this section, general recommendations relative to earthwork performed in wet weather or in wet conditions are presented below. These recommendations should be incorporated into the contract specifications.

- Soil stockpiles should be covered with plastic sheeting if wet weather conditions are anticipated.
- Silt fences should be installed between the work area and sensitive areas to prevent transport of sediment beyond the work area.

# Limitations

We have prepared this report for use by the Port of Anacortes, Kennedy Jenks and other members of the design team for use in design of the proposed Curtis Wharf Pump Out project in Anacortes, Washington.

Within the limitation of scope, schedule and budget, our services have been executed in accordance with generally accepted geotechnical practices in the area at the time the report was prepared. No warranty or other conditions, expressed or implied, should be understood.

Any electronic form, facsimile or hard copy of the original document (email, text, table, and/or figure), if provided, and any attachments are only a copy of the original document. The original document is stored by GeoEngineers, Inc. and will serve as the official document of record.

Please refer to the Attachment titled Report Limitations and Guidelines for Use for additional information related to use of this report.

We trust this letter suits your current needs. Please call if you have questions.

Sincerely,
GeoEngineers, Inc.

Aaron J. Hartvigsen, PE
Associate Geotechnical Engineer

AJH:seh

AARON J HARTVIGSEN
STATE OF WASHINGTON
46948
REGISTERED
PROFESSIONAL ENGINEER
12/3/2024

Attachments
Figure 1. Vicinity Map
Figure 2. Site Plan
Appendix A. Previous Site Explorations
Appendix B. Report Limitations and Guidelines for Use

One electronic copy submitted

Disclaimer: Any electronic form, facsimile or hard copy of the original document (email, text, table, and/or figure), if provided, and any attachments are only a copy of the original document. The original document is stored by GeoEngineers, Inc. and will serve as the official document of record.

# Figures

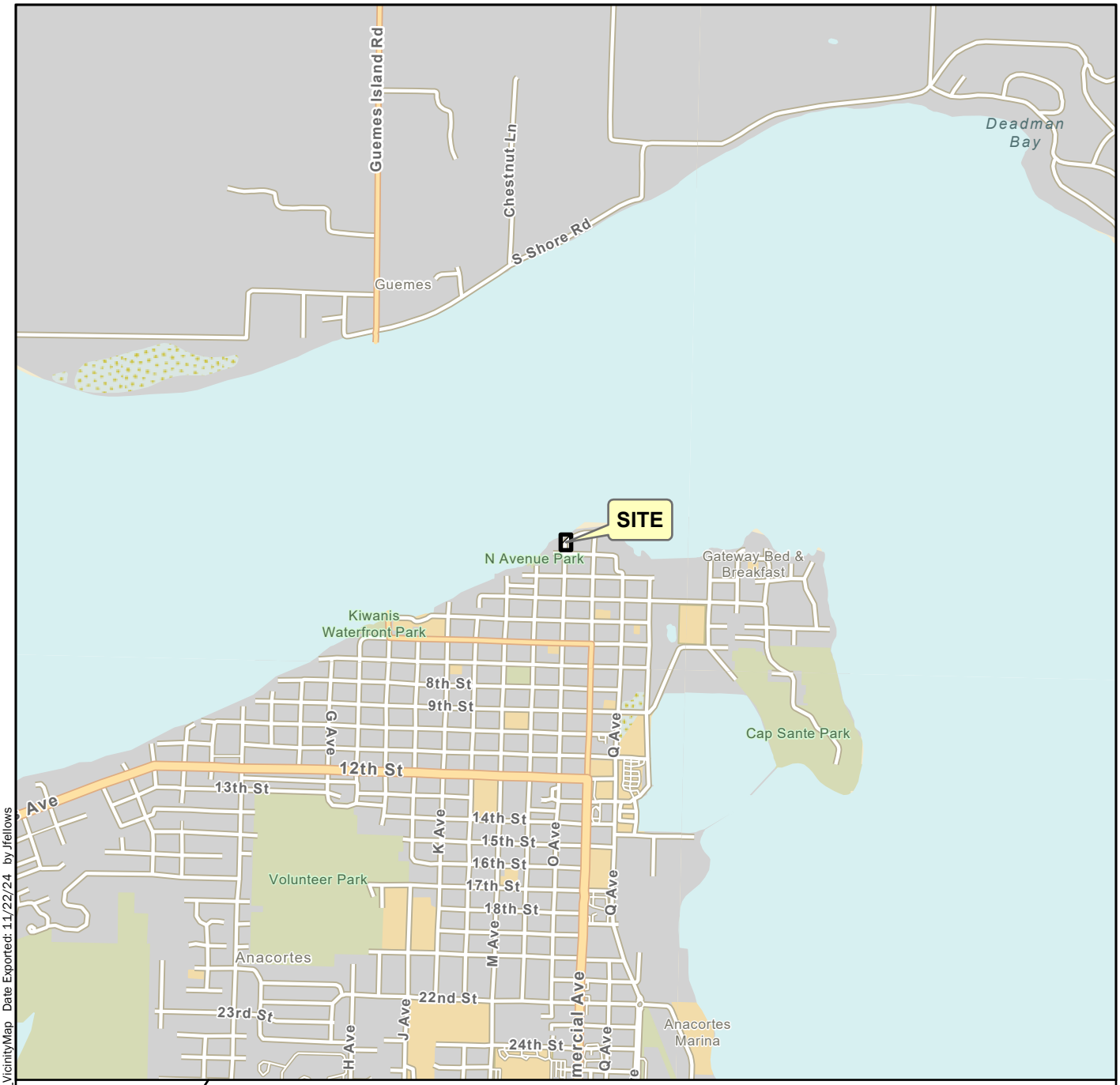


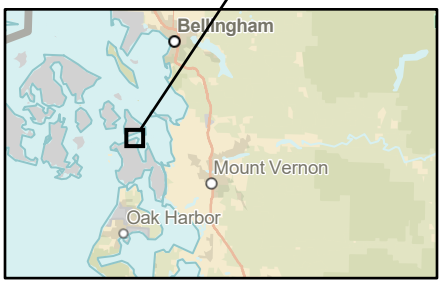


N

0 2,000

Feet

Source(s):
- ESRI

Coordinate System: NAD 1983 StatePlane Washington North FIPS 4601 Feet

**Disclaimer:** This figure was created for a specific purpose and project. Any use of this figure for any other project or purpose shall be at the user's sole risk and without liability to GeoEngineers. The locations of features shown may be approximate. GeoEngineers makes no warranty or representation as to the accuracy, completeness, or suitability of the figure, or data contained therein. The file containing this figure is a copy of a master document, the original of which is retained by GeoEngineers and is the official document of record.

**Vicinity Map**

Curtis Wharf Pump Out
Port of Anacortes, Washington

GeoEngineers

Figure 1

P:\5\5147034\GIS\5147034_Project\5147034_Project.aprx\5147034_F01_VicinityMap Date Exported: 11/22/24 by jfellows

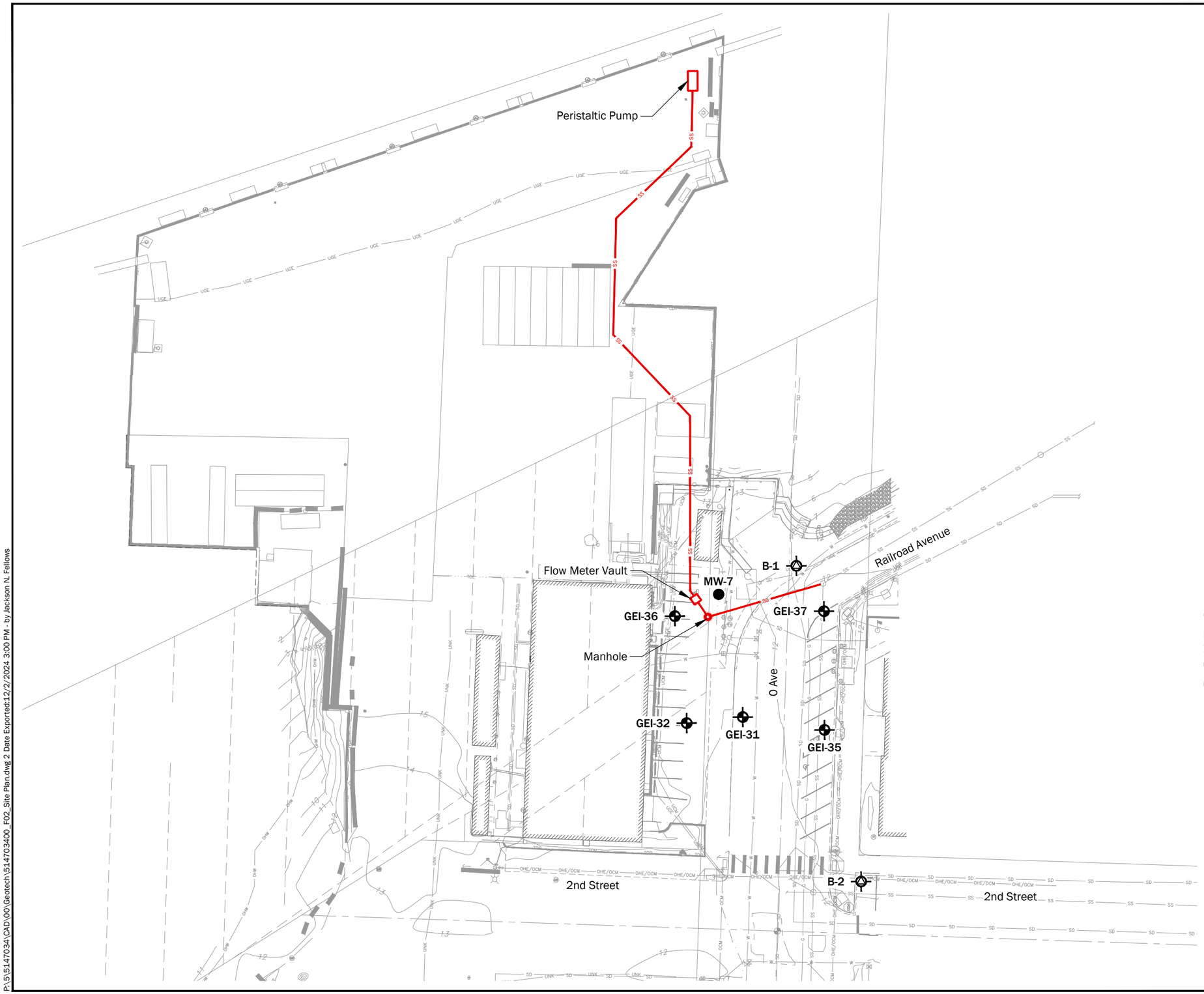


## Legend

- Proposed Force Main
- GEI-31 — Boring by GeoEngineers, 2017
- MW-7 — Monitoring Well by GeoEngineers, 2017
- B-1 — Boring by GeoEngineers, 2008

Source(s):
- Survey from Kennedy Jenks, dated 3/24

Coordinate System: WA State Plane, North Zone, NAD83, US Foot

**Disclaimer:** This figure was created for a specific purpose and project. Any use of this figure for any other project or purpose shall be at the user's sole risk and without liability to GeoEngineers. The locations of features shown may be approximate. GeoEngineers makes no warranty or representation as to the accuracy, completeness, or suitability of the figure, or data contained therein. The file containing this figure is a copy of a master document, the original of which is retained by GeoEngineers and is the official document of record.

N

0 50
Feet

**Site Plan**

Curtis Wharf Pump Out
Port of Anacortes, Washington

GEOENGINEERS

**Figure 2**

P:\5\5147034\CAD\00\Geotech\5147034000_F02_Site Plan.dwg 2 Date Exported:12/2/2024 3:00 PM - by Jackson N. Fellows

# Appendices

# Appendix A

## Previous Site Explorations

# Appendix A
# Previous Site Explorations

The following exploration logs at and near the site have been included in Appendix A:

- The logs of 5 borings and 1 monitoring well log from Technical Memorandum, "Hydrogeologic Evaluation, Quiet Cove Property, Anacortes, Washington," prepared for Washington State Department of Ecology by GeoEngineers, Inc., August 1, 2018.
- The logs of 2 borings from Geotechnical Data Report, "Port of Anacortes, Job Development Fund Infrastructure Improvements, Anacortes, Washington," prepared for Leonard Boudinot and Skodje, Inc by GeoEngineers, Inc., October 2, 2008.

## SOIL CLASSIFICATION CHART

| MAJOR DIVISIONS | | | SYMBOLS GRAPH | SYMBOLS LETTER | TYPICAL DESCRIPTIONS |
|---|---|---|---|---|---|
| COARSE GRAINED SOILS<br>MORE THAN 50% RETAINED ON NO. 200 SIEVE | GRAVEL AND GRAVELLY SOILS<br>MORE THAN 50% OF COARSE FRACTION RETAINED ON NO. 4 SIEVE | CLEAN GRAVELS<br>(LITTLE OR NO FINES) | | GW | WELL-GRADED GRAVELS, GRAVEL - SAND MIXTURES |
| | | | | GP | POORLY-GRADED GRAVELS, GRAVEL - SAND MIXTURES |
| | | GRAVELS WITH FINES<br>(APPRECIABLE AMOUNT OF FINES) | | GM | SILTY GRAVELS, GRAVEL - SAND - SILT MIXTURES |
| | | | | GC | CLAYEY GRAVELS, GRAVEL - SAND - CLAY MIXTURES |
| | SAND AND SANDY SOILS<br>MORE THAN 50% OF COARSE FRACTION PASSING ON NO. 4 SIEVE | CLEAN SANDS<br>(LITTLE OR NO FINES) | | SW | WELL-GRADED SANDS, GRAVELLY SANDS |
| | | | | SP | POORLY-GRADED SANDS, GRAVELLY SAND |
| | | SANDS WITH FINES<br>(APPRECIABLE AMOUNT OF FINES) | | SM | SILTY SANDS, SAND - SILT MIXTURES |
| | | | | SC | CLAYEY SANDS, SAND - CLAY MIXTURES |
| FINE GRAINED SOILS<br>MORE THAN 50% PASSING NO. 200 SIEVE | SILTS AND CLAYS | LIQUID LIMIT LESS THAN 50 | | ML | INORGANIC SILTS, ROCK FLOUR, CLAYEY SILTS WITH SLIGHT PLASTICITY |
| | | | | CL | INORGANIC CLAYS OF LOW TO MEDIUM PLASTICITY, GRAVELLY CLAYS, SANDY CLAYS, SILTY CLAYS, LEAN CLAYS |
| | | | | OL | ORGANIC SILTS AND ORGANIC SILTY CLAYS OF LOW PLASTICITY |
| | SILTS AND CLAYS | LIQUID LIMIT GREATER THAN 50 | | MH | INORGANIC SILTS, MICACEOUS OR DIATOMACEOUS SILTY SOILS |
| | | | | CH | INORGANIC CLAYS OF HIGH PLASTICITY |
| | | | | OH | ORGANIC CLAYS AND SILTS OF MEDIUM TO HIGH PLASTICITY |
| HIGHLY ORGANIC SOILS | | | | PT | PEAT, HUMUS, SWAMP SOILS WITH HIGH ORGANIC CONTENTS |

NOTE: Multiple symbols are used to indicate borderline or dual soil classifications

## ADDITIONAL MATERIAL SYMBOLS

| SYMBOLS GRAPH | SYMBOLS LETTER | TYPICAL DESCRIPTIONS |
|---|---|---|
| | AC | Asphalt Concrete |
| | CC | Cement Concrete |
| | CR | Crushed Rock/ Quarry Spalls |
| | SOD | Sod/Forest Duff |
| | TS | Topsoil |

### Groundwater Contact

Measured groundwater level in exploration, well, or piezometer

Measured free product in well or piezometer

### Graphic Log Contact

Distinct contact between soil strata

Approximate contact between soil strata

### Material Description Contact

Contact between geologic units

Contact between soil of the same geologic unit

### Sampler Symbol Descriptions

- 2.4-inch I.D. split barrel
- Standard Penetration Test (SPT)
- Shelby tube
- Piston
- Direct-Push
- Bulk or grab
- Continuous Coring

Blowcount is recorded for driven samplers as the number of blows required to advance sampler 12 inches (or distance noted). See exploration log for hammer weight and drop.

"P" indicates sampler pushed using the weight of the drill rig.

"WOH" indicates sampler pushed using the weight of the hammer.

### Laboratory / Field Tests

| | |
|---|---|
| %F | Percent fines |
| %G | Percent gravel |
| AL | Atterberg limits |
| CA | Chemical analysis |
| CP | Laboratory compaction test |
| CS | Consolidation test |
| DD | Dry density |
| DS | Direct shear |
| HA | Hydrometer analysis |
| MC | Moisture content |
| MD | Moisture content and dry density |
| Mohs | Mohs hardness scale |
| OC | Organic content |
| PM | Permeability or hydraulic conductivity |
| PI | Plasticity index |
| PP | Pocket penetrometer |
| SA | Sieve analysis |
| TX | Triaxial compression |
| UC | Unconfined compression |
| VS | Vane shear |

### Sheen Classification

| | |
|---|---|
| NS | No Visible Sheen |
| SS | Slight Sheen |
| MS | Moderate Sheen |
| HS | Heavy Sheen |

NOTE: The reader must refer to the discussion in the report text and the logs of explorations for a proper understanding of subsurface conditions. Descriptions on the logs apply only at the specific exploration locations and at the time the explorations were made; they are not warranted to be representative of subsurface conditions at other locations or times.

## Key to Exploration Logs

GEOENGINEERS

Figure B-1

| Drilled | Start 9/11/2017 | End 9/11/2017 | Total Depth (ft) | 15 | Logged By | NS | Driller | Cascade Drilling, LP | Drilling Method | Direch Push |
|---|---|---|---|---|---|---|---|---|---|---|
| | | | | | Checked By | BJT | | | | |

| | | | | | |
|---|---|---|---|---|---|
| Surface Elevation (ft)<br>Vertical Datum | 12.34<br>NAVD88 | Hammer Data | Pneumatic | Drilling Equipment | GeoProbe 6600 |
| Easting (X)<br>Northing (Y) | 1208884.7<br>559829.12 | System Datum | WA State Plane North<br>NAD83 (feet) | See "Remarks" section for groundwater observed | |

Notes:

| Elevation (feet) | Depth (feet) | FIELD DATA: Interval | Recovered (in) | Blows/foot | Collected Sample | Sample Name / Testing | Graphic Log | Group Classification | MATERIAL DESCRIPTION | Sheen | Headspace Vapor (ppm) | REMARKS |
|---|---|---|---|---|---|---|---|---|---|---|---|---|
| | 0 | | 42 | | | | | AC | Approximately 6 inches asphalt concrete | | | |
| | | | | | | 1 | | SP | Brown fine to coarse sand with gravel (dry) (fill) | NS | <1 | |
| 10 | | | | | | | | SP | Dark brown fine to medium sand with trace organic matter (moist) | NS | <1 | Geotextile at 2 feet bgs |
| | | | | | | 2 CA | | SP | Brown fine to medium sand (moist) | NS | <1 | |
| | | | | | | | | | | NS | <1 | |
| | 5 | | 60 | | | | | | | NS | <1 | |
| | | | | | | 3 CA | | SP-SM | Dark gray fine to medium sand with silt (moist) | NS | <1 | Groundwater observed at approximately 6½ feet at time of drilling |
| 5 | | | | | | | | SP | Light gray fine sand (wet) (native) | NS | <1 | |
| | | | | | | | | | | NS | <1 | |
| | | | | | | | | SP | Gray fine to medium sand (wet) | NS | <1 | |
| | | | | | | 4 | | | | NS | <1 | |
| | 10 | | 60 | | | | | | | NS | <1 | |
| | | | | | | | | SP | Gray fine to medium sand with occasional gravel (wet) | NS | <1 | |
| 0 | | | | | | | | | | NS | <1 | |
| | | | | | | 5 CA | | | | NS | <1 | |
| | | | | | | | | | | NS | <1 | |
| | 15 | | | | | | | | | | | |

Note: See Figure B-1 for explanation of symbols.
Coordinates Data Source: Horizontal approximated based on topographic land survey completed by Sound Development Group October 6, 2017. Vertical approximated based on topographic land survey completed by Sound Development Group October 6, 2017.

## Log of Boring GEI-31

GeoEngineers

Project: Quiet Cove
Project Location: Anacortes, Washington
Project Number: 5147-024-05

Figure B-4

Exhibit # I
Page 18 of 30



Date:5/9/18 Path:W:\PROJECTS\5\5147024\GINT\514702405.GPJ DBLibrary/Library:GEOENGINEERS_DF_STD_US_JUNE_2017.GLB/GEB_ENVIRONMENTAL_STANDARD_NO_GW

| Drilled | Start 9/11/2017 | End 9/11/2017 | Total Depth (ft) | 15 | Logged By | NS | Driller | Cascade Drilling, LP | Drilling Method | Direch Push |
|---|---|---|---|---|---|---|---|---|---|---|
| | | | | | Checked By | BJT | | | | |

| | | | | | |
|---|---|---|---|---|---|
| Surface Elevation (ft)<br>Vertical Datum | 13.44<br>NAVD88 | Hammer Data | Pneumatic | Drilling Equipment | GeoProbe 6600 |
| Easting (X)<br>Northing (Y) | 1208856.16<br>559826.1 | System Datum | WA State Plane North<br>NAD83 (feet) | See "Remarks" section for groundwater observed | |

Notes:

| Elevation (feet) | Depth (feet) | FIELD DATA: Interval | Recovered (in) | Blows/foot | Collected Sample | Sample Name Testing | Graphic Log | Group Classification | MATERIAL DESCRIPTION | Sheen | Headspace Vapor (ppm) | REMARKS |
|---|---|---|---|---|---|---|---|---|---|---|---|---|
| | 0 | | 54 | | | | | AC | Approximately 6 inches asphalt concrete | | | |
| | | | | | | 1 | | SP-SM | Brown fine to coarse sand with silt and gravel (fill) | NS | <1 | |
| | | | | | | | | | | NS | <1 | |
| | | | | | | | | ML | Brown silt with gravel (medium dense, moist) | NS | <1 | |
| 0 | | | | | | 2 CA | | SP-SM | Black fine sand with silt and trace organic matter (moist) | | | |
| | | | | | | | | SP-SM | Brown fine sand with silt (moist) | NS | <1 | |
| | 5 | | 58 | | | 3 | | | | NS | <1 | |
| | | | | | | | | | | NS | <1 | |
| | | | | | | | | SP-SM | Gray fine to medium sand with silt (moist) (native) | NS | <1 | |
| | | | | | | 4 CA | | | | NS | <1 | |
| 5 | | | | | | | | | | NS | <1 | Groundwater observed at approximately 9 feet at time of drilling |
| | 10 | | 60 | | | 5 CA | | SP | Grayish brown fine to coarse sand (wet) | NS | <1 | |
| | | | | | | | | | | NS | <1 | |
| | | | | | | | | | | NS | <1 | |
| 10 | | | | | | | | | | NS | <1 | |
| | | | | | | | | | | NS | <1 | |
| | 15 | | | | | | | | | | | |

Note: See Figure B-1 for explanation of symbols.
Coordinates Data Source: Horizontal approximated based on topographic land survey completed by Sound Development Group October 6, 2017. Vertical approximated based on topographic land survey completed by Sound Development Group October 6, 2017.

## Log of Boring GEI-32

GEOENGINEERS

Project: Quiet Cove
Project Location: Anacortes, Washington
Project Number: 5147-024-05

Figure B-5

Exhibit # I
Page 19 of 30



Date:5/9/18 Path:W:\PROJECTS\5\5147024\GINT\514702405.GPJ DBLibrary/Library:GEOENGINEERS_DF_STD_US_JUNE_2017.GLB/GEB_ENVIRONMENTAL_STANDARD_NO_GW

| Drilled | Start 9/11/2017 | End 9/11/2017 | Total Depth (ft) | 10 | Logged By | NS | Driller | Cascade Drilling, LP | Drilling Method | Direch Push |
|---|---|---|---|---|---|---|---|---|---|---|
| | | | | | Checked By | BJT | | | | |

| | | | | | |
|---|---|---|---|---|---|
| Surface Elevation (ft)<br>Vertical Datum | 11.67<br>NAVD88 | Hammer Data | Pneumatic | Drilling Equipment | GeoProbe 6600 |
| Easting (X)<br>Northing (Y) | 1208926.08<br>559822.33 | System Datum | WA State Plane North<br>NAD83 (feet) | See "Remarks" section for groundwater observed | |

Notes:

| Elevation (feet) | Depth (feet) | FIELD DATA: Interval | Recovered (in) | Blows/foot | Collected Sample | Sample Name Testing | Graphic Log | Group Classification | MATERIAL DESCRIPTION | Sheen | Headspace Vapor (ppm) | REMARKS |
|---|---|---|---|---|---|---|---|---|---|---|---|---|
| | 0 | | | | | | | AC | Approximately 6 inches asphalt concrete | | | |
| | | | | | | 1 | | ML | Gray silt (moist) (fill) | NS | <1 | |
| 10 | | | | | | 2 | | SP | Brown fine to coarse sand with gravel (moist) | NS | <1 | |
| | | | | | | | | ML | Gray-brown silt with trace organic matter (moist) | NS | <1 | |
| | | | | | | | | ML | Gray silt with sand (moist) | | | |
| | | | | | | 3 | | | | NS | <1 | |
| | 5 | | | | | | | SP-SM | Gray fine to medium sand with silt (dry) | NS | <1 | Groundwater observed at approximately 5½ feet at time of drilling |
| | | | | | | 4 | | | | NS | <1 | |
| 5 | | | | | | | | SP | Dark gray fine to medium sand (wet) (native) | NS | <1 | |
| | | | | | | 5 | | | | NS | <1 | |
| | | | | | | | | SP | Dark gray fine to medium sand with trace gravel (wet) | NS | <1 | |
| | 10 | | | | | | | | | | | |

Note: See Figure B-1 for explanation of symbols.
Coordinates Data Source: Horizontal approximated based on topographic land survey completed by Sound Development Group October 6, 2017. Vertical approximated based on topographic land survey completed by Sound Development Group October 6, 2017.

## Log of Boring GEI-35

GeoEngineers

Project: Quiet Cove
Project Location: Anacortes, Washington
Project Number: 5147-024-05

Figure B-3

Exhibit # I
Page 20 of 30



Date:5/9/18 Path:W:\PROJECTS\5\5147024\GINT\514702405.GPJ DBLibrary/Library:GEOENGINEERS_DF_STD_US_JUNE_2017.GLB/GEI8_ENVIRONMENTAL_STANDARD_NO_GW

| Drilled | Start 9/11/2017 | End 9/11/2017 | Total Depth (ft) | 15 | Logged By | NS | Driller | Cascade Drilling, LP | Drilling Method | Direch Push |
|---|---|---|---|---|---|---|---|---|---|---|
| | | | | | Checked By | BJT | | | | |

| | | | | | |
|---|---|---|---|---|---|
| Surface Elevation (ft)<br>Vertical Datum | 13.47<br>NAVD88 | Hammer Data | Pneumatic | Drilling Equipment | GeoProbe 6600 |
| Easting (X)<br>Northing (Y) | 1208850.34<br>559879.78 | System Datum | WA State Plane North<br>NAD83 (feet) | See "Remarks" section for groundwater observed | |

Notes:

| Elevation (feet) | Depth (feet) | FIELD DATA: Interval | Recovered (in) | Blows/foot | Collected Sample | Sample Name Testing | Graphic Log | Group Classification | MATERIAL DESCRIPTION | Sheen | Headspace Vapor (ppm) | REMARKS |
|---|---|---|---|---|---|---|---|---|---|---|---|---|
| | 0 | | 36 | | | | | AC | Approximately 3 inches asphalt concrete | | | |
| | | | | | | 1 | | SP | Gray-brown fine to coarse sand with gravel (moist) (fill) | NS | <1 | |
| | | | | | | 2 | | | | NS | <1 | |
| 0 | | | | | | | | | | NS | <1 | |
| | | | | | | | | | | NS | <1 | |
| | 5 | | 48 | | | | | SP | Brown fine to medium sand with occasional gravel and trace organic matter (moist) | NS | <1 | |
| | | | | | | | | | | NS | <1 | |
| | | | | | | 3 | | | | NS | <1 | |
| 5 | | | | | | | | | Becomes wet | NS | <1 | Groundwater observed at approximately 8 feet at time of drilling |
| | | | | | | | | | | NS | <1 | |
| | | | | | | | | SP | Gray fine to medium sand with gravel (wet) (native) | | | |
| | 10 | | 60 | | | | | | | NS | <1 | |
| | | | | | | | | | | NS | <1 | |
| | | | | | | | | | | NS | <1 | |
| | | | | | | | | SP | Gray fine to medium sand with occasional gravel (moist) | NS | <1 | |
| 10 | | | | | | 4 | | | | NS | <1 | |
| | 15 | | | | | | | | | | | |

Note: See Figure B-1 for explanation of symbols.
Coordinates Data Source: Horizontal approximated based on topographic land survey completed by Sound Development Group October 6, 2017. Vertical approximated based on topographic land survey completed by Sound Development Group October 6, 2017.

## Log of Boring GEI-36

GEOENGINEERS

Project: Quiet Cove
Project Location: Anacortes, Washington
Project Number: 5147-024-05

Figure B-3

Exhibit # I
Page 21 of 30



Date:5/9/18 Path:W:\PROJECTS\5\5147024\GINT\514702405.GPJ DBLibrary/Library:GEOENGINEERS_DF_STD_US_JUNE_2017.GLB/GEI8_ENVIRONMENTAL_STANDARD_NO_GW

| Drilled | Start 9/11/2017 | End 9/11/2017 | Total Depth (ft) | 15 | Logged By | NS | Driller | Cascade Drilling, LP | Drilling Method | Direch Push |
|---|---|---|---|---|---|---|---|---|---|---|
| | | | | | Checked By | BJT | | | | |

| | | | | | |
|---|---|---|---|---|---|
| Surface Elevation (ft)<br>Vertical Datum | 11.52<br>NAVD88 | Hammer Data | Pneumatic | Drilling Equipment | GeoProbe 6600 |
| Easting (X)<br>Northing (Y) | 1208925.74<br>559882.69 | System Datum | WA State Plane North<br>NAD83 (feet) | See "Remarks" section for groundwater observed | |

Notes:

| Elevation (feet) | Depth (feet) | FIELD DATA: Interval | Recovered (in) | Blows/foot | Collected Sample | Sample Name Testing | Graphic Log | Group Classification | MATERIAL DESCRIPTION | Sheen | Headspace Vapor (ppm) | REMARKS |
|---|---|---|---|---|---|---|---|---|---|---|---|---|
| | 0 | | 39 | | | | | AC | Approximately 6 inches asphalt concrete | | | |
| | | | | | | | | SM | Gray silty fine to medium sand (moist) (fill) | | | |
| 0 | | | | | | 1 | | SP | Grayish brown fine to coarse sand with gravel (dry) | NS | <1 | |
| | | | | | | | | SP | Dark gray fine to medium sand (dry) | NS | <1 | Geotextile fabric at 2¼ feet |
| | | | | | | 2 | | | | NS | <1 | |
| | | | | | | | | | | NS | <1 | |
| | | | | | | | | ML | Gray silt (moist) | | | |
| | 5 | | 60 | | | | | SP | Brown fine to medium sand with occasional gravel (moist) | NS | <1 | |
| | | | | | | 3 | | SP-SM | Gray fine to medium sand with silt (moist) | NS | <1 | |
| 5 | | | | | | | | | | NS | <1 | |
| | | | | | | | | | Becomes wet | NS | <1 | Groundwater observed at approximately 8 feet at time of drilling |
| | | | | | | 4 | | SP | Brown fine to medium sand (wet) (native) | NS | <1 | |
| | 10 | | 60 | | | | | | | NS | <1 | |
| | | | | | | | | | | NS | <1 | |
| 0 | | | | | | | | SP | Gray fine to coarse sand with occasional gravel (wet) | NS | <1 | |
| | | | | | | 5 | | | | NS | <1 | |
| | | | | | | | | | | NS | <1 | |
| | 15 | | | | | | | | | | | |

Note: See Figure B-1 for explanation of symbols.
Coordinates Data Source: Horizontal approximated based on topographic land survey completed by Sound Development Group October 6, 2017. Vertical approximated based on topographic land survey completed by Sound Development Group October 6, 2017.

## Log of Boring GEI-37

GeoEngineers

Project: Quiet Cove
Project Location: Anacortes, Washington
Project Number: 5147-024-05

Figure B-10

Exhibit # I
Page 22 of 30



Date:5/9/18 Path:W:\PROJECTS\5\5147024\GINT\514702405.GPJ DBLibrary/Library:GEOENGINEERS_DF_STD_US_JUNE_2017.GLB/GEB_ENVIRONMENTAL_STANDARD_NO_GW

| Drilled | Start 9/19/2017 | End 9/19/2017 | Total Depth (ft) 13.5 | Logged By NS / Checked By BJT | Driller Cascade Drilling, LP | Drilling Method Hollow-stem Auger |
|---|---|---|---|---|---|---|

| | | | |
|---|---|---|---|
| Hammer Data | Rope & Cathead 140 (lbs) / 30 (in) Drop | Drilling Equipment | CME 75 |
| Surface Elevation (ft) Vertical Datum | 13.1 NAVD88 | Top of Casing Elevation (ft) | 12.62 |
| Easting (X) Northing (Y) | 1208872.65 559890.97 | Horizontal Datum | WA State Plane North NAD83 (feet) |

DOE Well I.D.: BKA-357
A 2 (in) well was installed on 9/19/2017 to a depth of 10.3 (ft).

| Groundwater Date Measured | Depth to Water (ft) | Elevation (ft) |
|---|---|---|
| 10/18/2017 | 6.69 | 5.93 |

Notes:

## FIELD DATA

| Depth (feet) | Interval | Recovered (in) | Blows/foot | Collected Sample | Sample Name Testing | Water Level | Graphic Log | Group Classification | MATERIAL DESCRIPTION | Sheen | Headspace Vapor (ppm) |
|---|---|---|---|---|---|---|---|---|---|---|---|
| 0 | | | | | | | | CR | Crushed gravel | | |
| | | 10 | 9 | | 1 | | | SP | Brown fine to medium sand with trace gravel (loose, dry) (fill) | NS | <1 |
| | | 18 | 6 | | | | | | | NS | <1 |
| | | | | | | | | | | NS | <1 |
| | | 18 | 16 | | | | | SP | Brown fine to medium sand with occasional gravel (loose, dry) | NS | <1 |
| 5 | | | | | | | | | Becomes moist | | |
| | | 18 | 16 | | 2 | | | | | NS | <1 |
| | | | | | | | | SP | Brown fine to medium sand (loose, wet) | NS | <1 |
| | | 18 | 13 | | | | | SP | Brown fine to coarse sand with gravel (loose, wet) | NS | <1 |
| | | 18 | 10 | | | | | SP-SM | Dark brown fine to medium sand with silt (loose, wet) (native) | NS | <1 |
| 10 | | | | | | | | | | NS | <1 |
| | | 18 | 16 | | 3 | | | SP-SM | Brown fine to coarse sand with silt and gravel (loose, wet) | NS | <1 |
| | | 18 | 12 | | | | | SP-SM | Brown fine to medium sand with silt (loose, wet) | NS | <1 |
| | | | | | | | | | | NS | <1 |

Elevation (feet): 0, 10, 5, 0

## WELL LOG

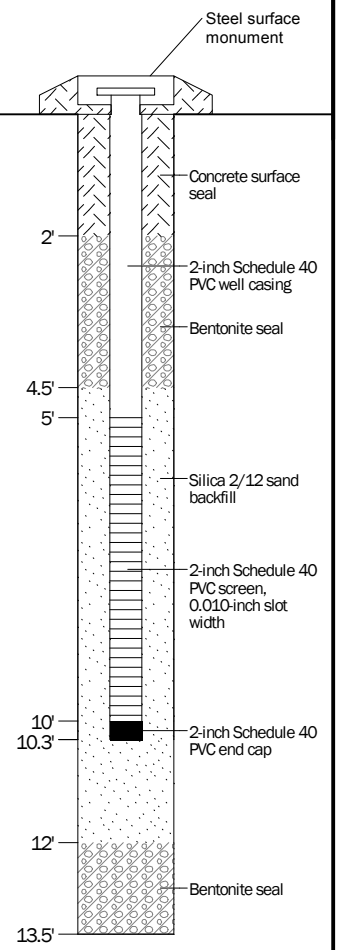


Note: See Figure B-1 for explanation of symbols.
Coordinates Data Source: Horizontal approximated based on topographic land survey completed by Sound Development Group October 6, 2017. Vertical approximated based on topographic land survey completed by Sound Development Group October 6, 2017.

# Log of Monitoring Well MW-7

GeoEngineers

Project: Quiet Cove
Project Location: Anacortes, Washington
Project Number: 5147-024-05

Figure B-15

Exhibit # I
Page 23 of 30



Date:5/9/18 Path:\\GEOENGINEERS.COM\WAN\PROJECTS\5\5147024\GINT\514702405.GPJ DBLibrary/Library:GEOENGINEERS_DF_STD_US_JUNE_2017.GLB/GEI8_ENVIRONMENTAL_WELL

| | | | | | |
|---|---|---|---|---|---|
| Date(s) Drilled | 9-25-2008 | Logged By | A. Fickeisen | Checked By | A. McCain |
| Drilling Contractor | Holocene Drilling | Drilling Method | Hollow-stem Auger | Sampling Methods | SPT |
| Auger Data | N/A | Hammer Data | 140 lb autohammer 30 inch drop | Drilling Equipment | B-61 Truck-mounted Drill Rig |
| Total Depth (ft) | 16.5 | Surface Elevation (ft) | Not determined | Groundwater Level (ft.bgs) | 10 |
| Vertical Datum | | Datum/ System | | Latitude: Longitude: | |

| Elevation feet / Depth feet | SAMPLES: Interval Recovered (in) | Blows/foot | Sub-Sample Sample Number | Water Level | Graphic Log | Group Symbol | MATERIAL DESCRIPTION | Moisture Content % | Dry Unit Weight, lbs/ft³ | OTHER TESTS AND NOTES |
|---|---|---|---|---|---|---|---|---|---|---|
| 0 | | | | | | AC | 1 to 2 inches of asphalt concrete | | | |
| | | | | | | CC | 8 inches of aged concrete | | | |
| | | | | | | SP-SM | Brown fine to medium sand with silt and gravel (medium dense, moist) (fill) | | | |
| | | | | | | SP-SM | Brown fine sand with silt (medium dense, moist) (beach deposits) | | | |
| 5 | 16 | 11 | 1 | | | | | | | |
| | | | | | | SP-SM | Gray fine to medium sand with silt and occasional gravel (dense, moist to wet) | | | |
| 10 | 18 | 43 | 2 | ▼ | | | - becomes wet | | | |
| 15 | 18 | 32 | 3 | | | | - gravel content increases | | | |
| 20 | | | | | | | | | | |
| 25 | | | | | | | | | | |

Note: See Figure 3 for explanation of symbols.

V6_GTBORING P:\5\5147017\00\WORKING\514701700 BOR.GPJ GEIV6_1.GDT 10/2/08

## LOG OF BORING B-1

GEOENGINEERS

Project: Job Development Fund Infrastructure Improvements
Project Location: Anacortes, Washington
Project Number: 5147-017-00

Figure 4

Exhibit # I
Page 24 of 30

| | | | | | |
|---|---|---|---|---|---|
| Date(s) Drilled | 9-25-2008 | Logged By | A. Fickeisen | Checked By | A. McCain |
| Drilling Contractor | Holocene Drilling | Drilling Method | Hollow-stem Auger | Sampling Methods | SPT |
| Auger Data | N/A | Hammer Data | 140 lb autohammer 30 inch drop | Drilling Equipment | B-61 Truck-mounted Drill Rig |
| Total Depth (ft) | 21.5 | Surface Elevation (ft) | Not determined | Groundwater Level (ft.bgs) | 8 |
| Vertical Datum | | Datum/ System | | Latitude: Longitude: | |

| Elevation feet | Depth feet | SAMPLES Interval | Recovered (in) | Blows/foot | Sub-Sample | Sample Number | Water Level | Graphic Log | Group Symbol | MATERIAL DESCRIPTION | Moisture Content % | Dry Unit Weight, lbs/ft³ | OTHER TESTS AND NOTES |
|---|---|---|---|---|---|---|---|---|---|---|---|---|---|
| | 0 | | | | | | | | AC | 3 inches of asphalt concrete | | | |
| | | | | | | | | | CC | 8 inches of aged concrete | | | |
| | | | | | | | | | SP-SM | Brown fine to medium sand with silt and gravel (medium dense, moist) (fill) | | | |
| | | | | | | | | | ML | Gray sandy silt with occasional gravel (medium stiff, moist to wet) (fill) | | | |
| | 5 | | 6 | 4 | | 1 | | | | | | | |
| | | | | | | | ▼ | | SP-SM | Gray fine sand with occasional gravel and silt (medium dense, wet) (beach deposits) | | | |
| | 10 | | 12 | 15 | | 2 | | | | | 22 | | GS; %F=8 |
| | | | | | | | | | SC | Gray clayey fine to coarse sand with occasional gravel (medium dense, wet) (transitional zone) | | | |
| | 15 | | 12 | 11 | | 3 | | | | | | | |
| | | | | | | | | | CL | Brown clay with sand and occasional gravel (very stiff, wet) (recessional marine drift) | | | |
| | 20 | | 9 | 16 | | 4 | | | | | | | |
| | 25 | | | | | | | | | | | | |

Note: See Figure 3 for explanation of symbols.

## LOG OF BORING B-2

GEOENGINEERS

Project: Job Development Fund Infrastructure Improvements
Project Location: Anacortes, Washington
Project Number: 5147-017-00

Figure 3

V6_GTBORING P:\5\5147017\00\WORKING\514701700 BOR.GPJ GEIV6_1.GDT 10/2/08

# Appendix B

## Report Limitations and Guidelines for Use

# Appendix B
# Report Limitations and Guidelines For Use[1]

This appendix provides information to help you manage your risks with respect to the use of this report.

## READ THESE PROVISIONS CLOSELY

It is important to recognize that the geoscience practices (geotechnical engineering, geology and environmental science) rely on professional judgment and opinion to a greater extent than other engineering and natural science disciplines, where more precise and/or readily observable data may exist. To help clients better understand how this difference pertains to our services, GeoEngineers includes the following explanatory "limitations" provisions in its reports. Please confer with GeoEngineers if you need to know more how these "Report Limitations and Guidelines for Use" apply to your project or site.

## GEOTECHNICAL SERVICES ARE PERFORMED FOR SPECIFIC PURPOSES, PERSONS AND PROJECTS

This report has been prepared for Port of Anacortes and Kennedy Jenks for the Project(s) specifically identified in the report. The information contained herein is not applicable to other sites or projects.

GeoEngineers structures its services to meet the specific needs of its clients. No party other than the party to whom this report is addressed may rely on the product of our services unless we agree to such reliance in advance and in writing. Within the limitations of the agreed scope of services for the Project, and its schedule and budget, our services have been executed in accordance with Subcontract Terms and Conditions for Professional Services and Technical Services with Kennedy Jenks authorized on October 18, 2024, and generally accepted geotechnical practices in this area at the time this report was prepared. We do not authorize, and will not be responsible for, the use of this report for any purposes or projects other than those identified in the report.

## A GEOTECHNICAL ENGINEERING OR GEOLOGIC REPORT IS BASED ON A UNIQUE SET OF PROJECT-SPECIFIC FACTORS

This report has been prepared for the Curtis Wharf Pump Out Facility Design project . GeoEngineers considered a number of unique, project-specific factors when establishing the scope of services for this project and report. Unless GeoEngineers specifically indicates otherwise, it is important not to rely on this report if it was:

- not prepared for you,
- not prepared for your project,
- not prepared for the specific site explored, or
- completed before important project changes were made.

[1] Developed based on material provided by GBA, GeoProfessional Business Association; www.geoprofessional.org.

For example, changes that can affect the applicability of this report include those that affect:

- the function of the proposed structure;
- elevation, configuration, location, orientation or weight of the proposed structure;
- composition of the design team; or
- project ownership.

If changes occur after the date of this report, GeoEngineers cannot be responsible for any consequences of such changes in relation to this report unless we have been given the opportunity to review our interpretations and recommendations. Based on that review, we can provide written modifications or confirmation, as appropriate.

## ENVIRONMENTAL CONCERNS ARE NOT COVERED

Unless environmental services were specifically included in our scope of services, this report does not provide any environmental findings, conclusions, or recommendations, including but not limited to, the likelihood of encountering underground storage tanks or regulated contaminants.

## SUBSURFACE CONDITIONS CAN CHANGE

This geotechnical or geologic report is based on conditions that existed at the time the study was performed. The findings and conclusions of this report may be affected by the passage of time, by man-made events such as construction on or adjacent to the site, new information or technology that becomes available subsequent to the report date, or by natural events such as floods, earthquakes, slope instability or groundwater fluctuations. If more than a few months have passed since issuance of our report or work product, or if any of the described events may have occurred, please contact GeoEngineers before applying this report for its intended purpose so that we may evaluate whether changed conditions affect the continued reliability or applicability of our conclusions and recommendations.

## GEOTECHNICAL AND GEOLOGIC FINDINGS ARE PROFESSIONAL OPINIONS

Our interpretations of subsurface conditions are based on field observations from widely spaced sampling locations at the site. Site exploration identifies the specific subsurface conditions only at those points where subsurface tests are conducted or samples are taken. GeoEngineers reviewed field and laboratory data and then applied its professional judgment to render an informed opinion about subsurface conditions at other locations. Actual subsurface conditions may differ, sometimes significantly, from the opinions presented in this report. Our report, conclusions and interpretations are not a warranty of the actual subsurface conditions.

## GEOTECHNICAL ENGINEERING REPORT RECOMMENDATIONS ARE NOT FINAL

We have developed the following recommendations based on data gathered from subsurface investigation(s). These investigations sample just a small percentage of a site to create a snapshot of the subsurface conditions elsewhere on the site. Such sampling on its own cannot provide a complete and accurate view of subsurface conditions for the entire site. Therefore, the recommendations included in this report are preliminary and should not be considered final. GeoEngineers' recommendations can be finalized only by observing actual subsurface conditions revealed during construction. GeoEngineers

cannot assume responsibility or liability for the recommendations in this report if we do not perform construction observation.

We recommend that you allow sufficient monitoring, testing and consultation during construction by GeoEngineers to confirm that the conditions encountered are consistent with those indicated by the explorations, to provide recommendations for design changes if the conditions revealed during the work differ from those anticipated, and to evaluate whether earthwork activities are completed in accordance with our recommendations. Retaining GeoEngineers for construction observation for this project is the most effective means of managing the risks associated with unanticipated conditions. If another party performs field observation and confirms our expectations, the other party must take full responsibility for both the observations and recommendations. Please note, however, that another party would lack our project-specific knowledge and resources.

## A GEOTECHNICAL ENGINEERING OR GEOLOGIC REPORT COULD BE SUBJECT TO MISINTERPRETATION

Misinterpretation of this report by members of the design team or by contractors can result in costly problems. GeoEngineers can help reduce the risks of misinterpretation by conferring with appropriate members of the design team after submitting the report, reviewing pertinent elements of the design team's plans and specifications, participating in pre-bid and preconstruction conferences, and providing construction observation.

## DO NOT REDRAW THE EXPLORATION LOGS

Geotechnical engineers and geologists prepare final boring and testing logs based upon their interpretation of field logs and laboratory data. The logs included in a geotechnical engineering or geologic report should never be redrawn for inclusion in architectural or other design drawings. Photographic or electronic reproduction is acceptable, but separating logs from the report can create a risk of misinterpretation.

## GIVE CONTRACTORS A COMPLETE REPORT AND GUIDANCE

To help reduce the risk of problems associated with unanticipated subsurface conditions, GeoEngineers recommends giving contractors the complete geotechnical engineering or geologic report, including these "Report Limitations and Guidelines for Use." When providing the report, you should preface it with a clearly written letter of transmittal that:

- advises contractors that the report was not prepared for purposes of bid development and that its accuracy is limited; and
- encourages contractors to conduct additional study to obtain the specific types of information they need or prefer.

## CONTRACTORS ARE RESPONSIBLE FOR SITE SAFETY ON THEIR OWN CONSTRUCTION PROJECTS

Our geotechnical recommendations are not intended to direct the contractor's procedures, methods, schedule or management of the work site. The contractor is solely responsible for job site safety and for managing construction operations to minimize risks to on-site personnel and adjacent properties.

## BIOLOGICAL POLLUTANTS

GeoEngineers' Scope of Work specifically excludes the investigation, detection, prevention or assessment of the presence of Biological Pollutants. Accordingly, this report does not include any interpretations, recommendations, findings or conclusions regarding the detecting, assessing, preventing or abating of Biological Pollutants, and no conclusions or inferences should be drawn regarding Biological Pollutants as they may relate to this project. The term "Biological Pollutants" includes, but is not limited to, molds, fungi, spores, bacteria and viruses, and/or any of their byproducts.

A Client that desires these specialized services is advised to obtain them from a consultant who offers services in this specialized field.

## INFORMATION PROVIDED BY OTHERS

GeoEngineers has relied upon certain data or information provided or compiled by others in the performance of our services. Although we use sources that we reasonably believe to be trustworthy, GeoEngineers cannot warrant or guarantee the accuracy or completeness of information provided or compiled by others.

# Small Site Construction SWPPP

City of Anacortes Stormwater · 904 6th Street · Anacortes, WA 98221
Stormwater Inspector: 360-630-1037

Permit #: SDP-2025-0001
Received by: Aaron Esterholt
Stormwater Review

## General Information

| | | | |
|---|---|---|---|
| **Project Name** | Curtis Wharf Pumpout & Shorepower | **Parcel Size** | 0.74 acres |
| **Project Address** | 116 O Ave | | |
| **Property Owner** | Port of Anacortes | **Phone** | 360-299-3134 |
| **Site Contact** | Kevin Anderson | **Phone** | 360-770-5194 |
| **Project Description** | *The proposed project will bring utilities to the head of Curtis Wharf to serve existing vessel traffic. Utility updates will consist of a commercial pumpout and upgraded shorepower pedestals. These will allow vessels to discharge blackwater directly to the sanitary sewer and to turn off their generators/engines while at berth. The only ground disturbing activities are excavation for a sewer forcemain from the bulkhead of Curtis Wharf to an exisiting manhole in O /Railroad Avenue. These excavations will be limited to the alignment of the sewer lateral and be less than 800 sf in total. The project will increase impermeable surfaces nor change uses on site.* | | |
| **Erosion control lead or responsible party** | Port of Anacortes<br>Kevin Anderson<br>360-770-5194 | **Phone** | |
| **Engineer/Firm** | | **Phone** | |

## Site Conditions

**Adjacent Areas**. See the site plan, drainage plan, and construction drawings approved for the associated permit.

**Critical areas.** See the critical areas site plan approved for the associated permit.

☐ Attach a copy of your stormwater site plan submitted with your building/grading permit application and attach pictures of construction site.

*Stormwater site plan shall list all BMPs for inspectors

PCED Received
Date: 02/05/2025
Document received by the Planning, Community & Economic Development Department

Exhibit # J
Page 1 of 4

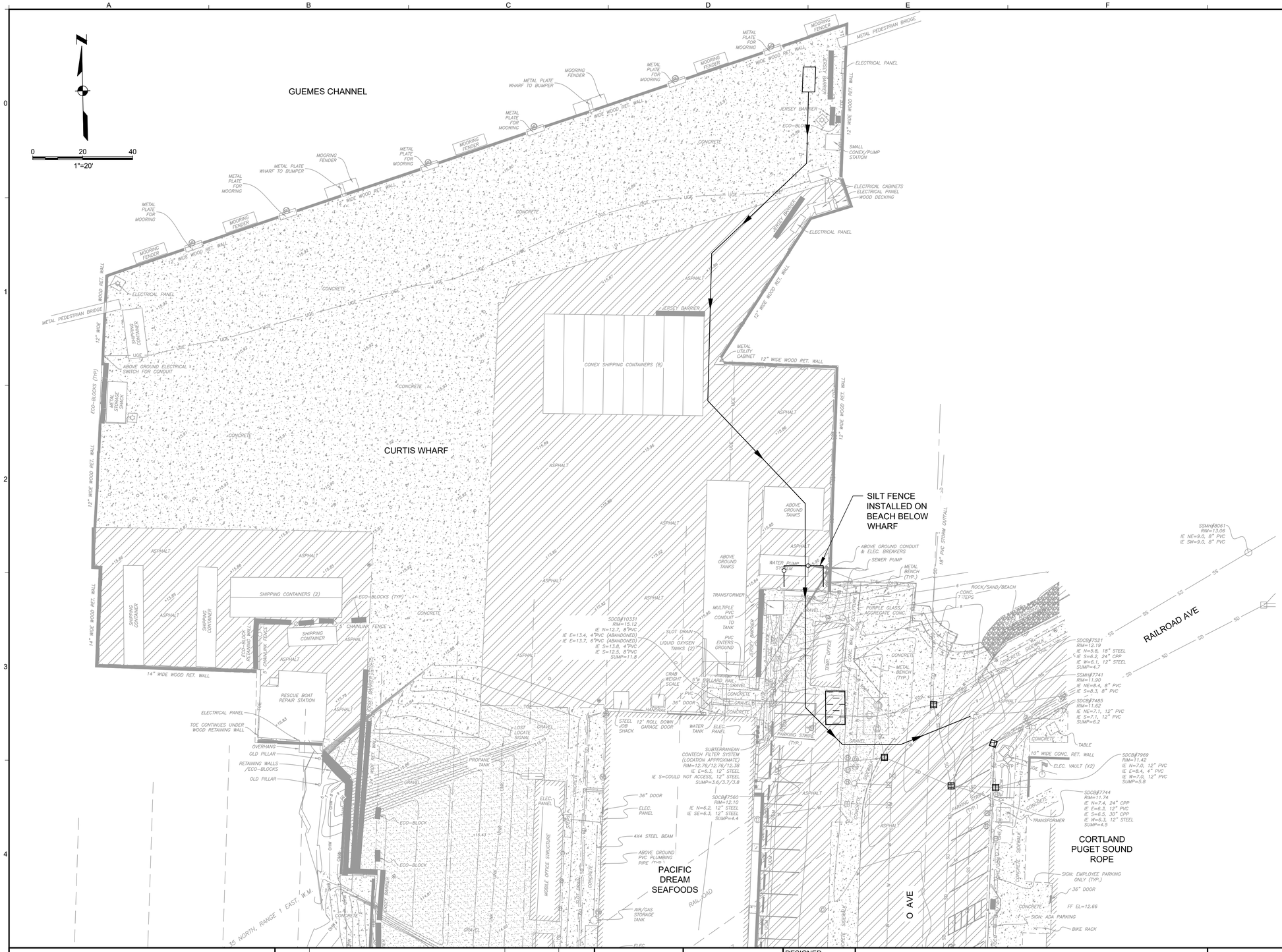


# EROSION AND SEDIMENT CONTROL NOTES

1. THE CONTRACTOR SHALL CONDUCT ALL EROSION AND SEDIMENT CONTROL PRACTICES IN ACCORDANCE WITH THE SPECIFICATIONS AND CONSTRUCTION SWPPP.
2. THE IMPLEMENTATION OF TESC PLANS AND THE CONSTRUCTION, MAINTENANCE, REPLACEMENT, UPGRADING, AND REMOVAL OF TESC FACILITIES SHALL BE THE RESPONSIBILITY OF THE CONTRACTOR UNTIL ALL CONSTRUCTION IS COMPLETE AND APPROVED.
3. CONTRACTOR SHALL PERFORM ALL TESC MEASURES AS NECESSARY TO ENSURE NO AGGREGATE, PAVEMENT, SOIL, OR OTHER MATERIALS ARE TRACKED OUT OF THE WORK AREA. TESC FACILITIES SHALL BE UPGRADED AS NECESSARY TO ENSURE THAT SEDIMENT AND SEDIMENT-LADEN WATER DOES NOT LEAVE THE WORK LIMITS.
4. CONTRACTOR SHALL INSTALL STORMWATER INLET PROTECTION FOR ALL INLETS WITHIN THE WORK LIMITS AND WITHIN 100 FEET OF THE WORK LIMITS AND ALL HAUL ROUTES. SEE DETAIL 1 ON SHEET C-102. INLET PROTECTION SHALL BE MAINTAINED UNTIL THE INLET IS DEMOLISHED (IF CALLED FOR) OR UNTIL ALL CONSTRUCTION IS COMPLETE AND APPROVED, AS APPLICABLE.
5. AT NO TIME SHALL MORE THAN 1 FOOT OF SEDIMENT BE ALLOWED TO ACCUMULATE WITHIN THE STORMWATER INLET PROTECTION.
6. ALL PROPOSED TESC FACILITIES SHALL BE SUBMITTED TO THE ENGINEER FOR REVIEW.
7. ALL TESC FACILITIES SHALL BE CONSTRUCTED PRIOR TO CONSTRUCTION ACTIVITIES AND IN SUCH A MANNER AS TO ENSURE THAT CONSTRUCTION STORMWATER DOES NOT ENTER THE DRAINAGE SYSTEM OR ADJACENT WATER BODY, OR VIOLATE APPLICABLE WATER QUALITY STANDARDS.
8. STABILIZATION SHALL BE PROVIDED FOR STOCKPILE(S) AND UPGRADED AS NECESSARY TO MINIMIZE SEDIMENT LOSSES, AS SHOWN IN DETAIL 2 OF SHEET C-004.
9. STOCKPILE, CONTRACTOR LAYDOWN, AND MATERIAL STAGING LOCATIONS SHALL BE IDENTIFIED IN THE FIELD WITH THE PORT PRIOR TO CONSTRUCTION. STOCKPILES(S) SHALL BE SURROUNDED BY ECOLOGY BLOCKS, BARRICADES, HIGH VISIBILITY FENCING AND/OR OTHER MEASURES TO PROVIDE FOR PUBLIC, PORT, AND CONTRACTOR SAFETY.
10. TRACK OUT FROM THE STOCKPILE SHALL BE MINIMIZED, AND PRIOR TO FINAL CLOSEOUT, STOCKPILE AREA SHALL BE CLEARED OF ACCUMULATED OR STRAY SEDIMENT.
11. TRACK OUT ONTO PUBLIC ROADS SHALL BE PREVENTED. IN THE EVENT IT OCCURS, A SWEEPER TRUCK OR OTHER TESC MEASURES SHALL BE USED TO COLLECT AND REMOVE ANY TRACKED OUT SEDIMENT FROM PUBLIC ROADS BY THE END OF THE WORK DAY.

## LEGEND

| | |
|---|---|
| CATCH BASIN FILTER | 1 / C-002 |
| STOCKPILE LOCATION | 2 / C-002 |
| SILT FENCE | 3 / C-002 |

30% SUBMITTAL

PRELIMINARY DESIGN PHASE

NOT FOR CONSTRUCTION

THIS DOCUMENT IS AN INTERIM DOCUMENT AND NOT SUITABLE FOR CONSTRUCTION. AS AN INTERIM DOCUMENT, IT MAY CONTAIN DATA THAT IS POTENTIALLY INACCURATE OR INCOMPLETE AND IS NOT TO BE RELIED UPON WITHOUT THE EXPRESS WRITTEN CONSENT OF THE PREPARER.

| NO | REVISION | DATE | BY |
|---|---|---|---|

SCALES

0 — 1"

0 — 25mm

IF THIS BAR IS NOT DIMENSION SHOWN, ADJUST SCALES ACCORDINGLY.

THIS PRELIMINARY DOCUMENT IS NOT FOR CONSTRUCTION. IT IS RELEASED UNDER THE AUTHORITY OF: SAMANTHA KARPA 21024598 JANUARY 2025

DESIGNED KJ

DRAWN AKM

CHECKED SNK

PORT OF ANACORTES

ANACORTES, WASHINGTON

CURTIS WHARF COMMERCIAL PUMP OUT FACILITY

Kennedy Jenks

EROSION AND SEDIMENT CONTROL PLAN AND NOTES

SCALE 1" = 20'

JOB NO 1996021.19

DATE JANUARY 2025

SHEET OF ---

Exhibit # J
Page 2 of 4



Plot Date: 1/17/2025 1:13 PM
User: AEKJM MHAJAN
pw:\\kjce-pw.bentley.com:kjce-pw\Documents\Clients\Anacortes, Port of WA\Projects\Curtis Wharf Pump Out Facility Final Design_1996021.19\10-Design\10.06-Drawings\Civil\1996021.19-C-003

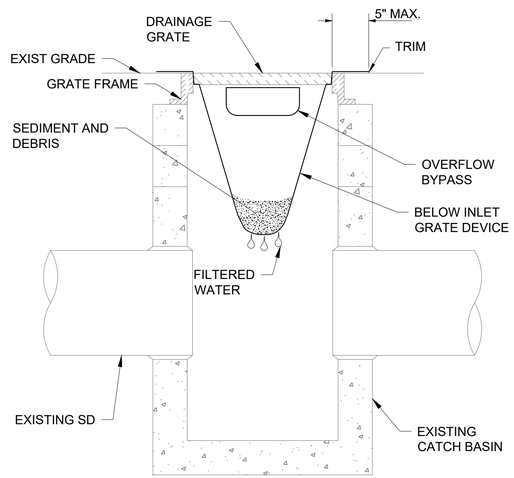


1 C-002 CATCH BASIN FILTER
SCALE: NTS

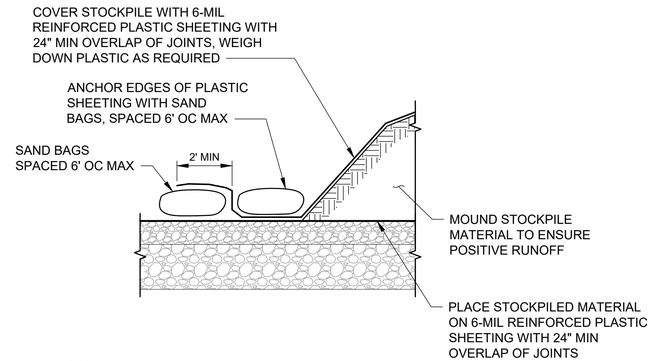


NOTES:
1. RIPS AND/OR TEARS IN THE PLASTIC SHEETING SHALL BE REPAIRED IN A TIMELY MANNER.
2. MATERIAL SHALL BE STOCKPILED NO STEEPER THAN 1 TO 1 SLOPE.
3. THE TOE OF THE STOCKPILE SHALL BE NO CLOSER THAN 2-FT FROM THE EDGE OF EXCAVATION.
4. STOCKPILE HEIGHT SHALL NOT EXCEED 10-FT.

2 C-002 STOCKPILE
SCALE: NTS

NOTES:
1. SILT FENCE EXTENTS SHOWN ON THE PLANS ARE APPROXIMATE. CONTRACTOR IS RESPONSIBLE FOR MODIFYING THE EXTENTS OF THE SILT FENCE AS NECESSARY TO PREVENT SEDIMENT AND SEDIMENT-LADEN RUNOFF FROM LEAVING THE CONSTRUCTION SITE.
2. REFER TO THE SPECIFICATIONS SECTION 01 57 13 FOR COMPLETE EROSION AND SEDIMENT CONTROL REQUIREMENTS.
3. BURY BOTTOM OF FILTER FABRIC 6" MIN. VERTICALLY BELOW FINISHED GRADE.
4. 2" x 2" FIR, PINE, OR STEEL FENCE POSTS.
5. STITCHED LOOPS TO BE INSTALLED ON UPHILL SIDE OF SLOPE.
6. COMPACT NATIVE FILL IN ALL AREAS OF FILTER FABRIC TRENCH.
7. DURING EXCAVATION, MINIMIZE DISTURBING THE GROUND AROUND TRENCH AS MUCH AS IS FEASIBLE, SMOOTH SURFACE FOLLOWING EXCAVATION TO AVOID CONCENTRATING FLOWS.

SEDIMENT FENCE SPACING:

| SLOPE | SPACING |
|---|---|
| <10% | 300 FT. |
| <15% | 150 FT. |
| <20% | 100 FT. |
| <30% | 50 FT. |
| <50% | 25 FT. |
| STOCK PILE SLOPE >50% | 25 FT. |

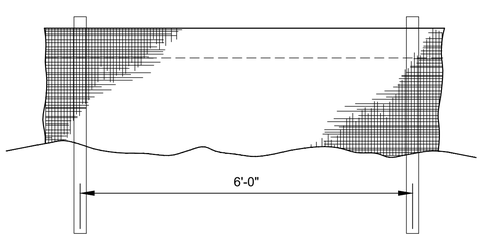


**FRONT VIEW**

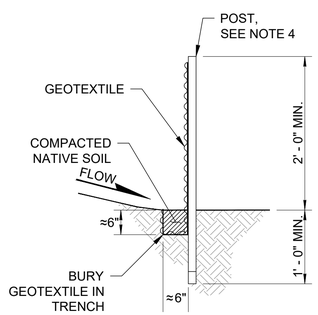


**SIDE VIEW**

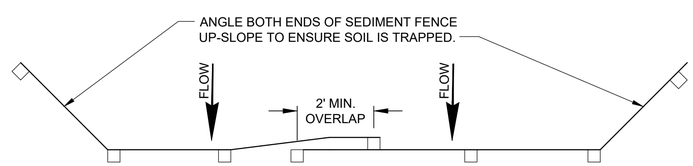


**TOP VIEW**

3 C-002 SILT FENCE
SCALE: NTS

30% SUBMITTAL

PRELIMINARY DESIGN PHASE

NOT FOR CONSTRUCTION

THIS DOCUMENT IS AN INTERIM DOCUMENT AND NOT SUITABLE FOR CONSTRUCTION. AS AN INTERIM DOCUMENT, IT MAY CONTAIN DATA THAT IS POTENTIALLY INACCURATE OR INCOMPLETE AND IS NOT TO BE RELIED UPON WITHOUT THE EXPRESS WRITTEN CONSENT OF THE PREPARER.

| NO | REVISION | DATE | BY |
|---|---|---|---|

SCALES
0 — 1"
0 — 25mm
IF THIS BAR IS NOT DIMENSION SHOWN, ADJUST SCALES ACCORDINGLY.

THIS PRELIMINARY DOCUMENT IS NOT FOR CONSTRUCTION. IT IS RELEASED UNDER THE AUTHORITY OF: SAMANTHA KARPA 21024598 JANUARY 2025

DESIGNED KJ
DRAWN KJ
CHECKED SNK

PORT OF ANACORTES
ANACORTES, WASHINGTON
CURTIS WHARF COMMERCIAL PUMP OUT FACILITY

Kennedy Jenks

EROSION AND SEDIMENT CONTROL DETAILS

SCALE NTS
JOB NO 1996021.19
DATE JANUARY 2025
SHEET OF ---

Exhibit # J
Page 3 of 4



Plot Date: 1/17/2025 1:13 PM
User: AEKJM MHAJAN
pw:\\kjce-pw.bentley.com:kjce-pw\Documents\Clients\Anacortes, Port of WA\Projects\Curtis Wharf Pump Out Facility Final Design_1996021.19\10-Design\10.06-Drawings\Civil\1996021.19-C-004

## 13 Protect Low-Impact Development BMPs

***Low-Impact Development techniques can be damaged if they are compacted or accumulate sediment during construction.***

If there are any Low-Impact Development BMPs planned for the site:

- Use BMP **C103 High Visibility Fence** to exclude all construction and foot traffic from the infiltration, bio-retention, or rain garden areas.
- Protect all infiltration areas or bio-retention and rain garden BMPs from sedimentation through installation and maintenance of erosion and sediment control BMPs on portions of the site that drain into those areas.
- Use BMP **C233 Silt Fence** or **C234 Vegetated Strip** to control and avoid introducing sediment onto permeable pavements. Bury the bottom of the filter fabric at least 4 inches below the ground surface. **Backfill and tamp soil in place over the buried portion of the filter fabric, so that no flow can pass beneath the fence and scouring cannot occur.** Drive or place the fence posts into the ground at least 18 inches. A 12-inch minimum depth is allowed if topsoil or other soft subgrade soil is not present and 18 inches cannot be reached.
- If pavements are fouled with sediments or no longer pass an initial infiltration test, clean them using procedures from the Stormwater Manual or the manufacturer's procedures.

Consider the following additional BMPs:

- C102 Buffer Zones
- C208 Triangular Silt Dike
- C231 Brush Barries

**********

**I acknowledge that I have read the information presented to me and agree to abide by the BMP rules.**

Kevin Anderson

**Printed name** **Signature**

1/28/25

**Date**

**********

REVIEWED FOR PLANNING COMPLIANCE CITY OF ANACORTES 1891

# WASHINGTON STATE
# Joint Aquatic Resources Permit Application (JARPA) Form[1,2] [help]

**USE BLACK OR BLUE INK TO ENTER ANSWERS IN THE WHITE SPACES BELOW.**

US Army Corps of Engineers ®
Seattle District

AGENCY USE ONLY

**Date received:**

**Agency reference #:** _____

**Tax Parcel #(s):** _____

_____

PCED Received
Date: 02/05/2025
Document received by the Planning, Community & Economic Development Department

## Part 1–Project Identification

| **1.** Project Name (A name for your project that you create. Examples: Smith's Dock or Seabrook Lane Development) [help] |
|---|
| Curtis Wharf Shore power and Pump out MRT-70 & 71 |

## Part 2–Applicant

The person and/or organization responsible for the project. [help]

| **2a.** Name (Last, First, Middle) | | | |
|---|---|---|---|
| Kevin Anderson | | | |
| **2b.** Organization (If applicable) | | | |
| Port of Anacortes | | | |
| **2c.** Mailing Address (Street or PO Box) | | | |
| 317 Commercial Ave | | | |
| **2d.** City, State, Zip | | | |
| Anacortes, WA 98221 | | | |
| **2e.** Phone (1) | **2f.** Phone (2) | **2g.** Fax | **2h.** E-mail |
| 360-293-3134 | | | Kevin.anderson@portofanacortes.com |

[1]Additional forms may be required for the following permits:
- If your project may qualify for Department of the Army authorization through a Regional General Permit (RGP), contact the U.S. Army Corps of Engineers for application information (206) 764-3495.
- Not all cities and counties accept the JARPA for their local Shoreline permits. If you need a Shoreline permit, contact the appropriate city or county government to make sure they accept the JARPA.

[2]To access an online JARPA form with [help] screens, go to https://www.oria.wa.gov/jarpa-forms.

For other help, contact the Governor's Office for Regulatory Innovation and Assistance at (800) 917-0043 or help@oria.wa.gov.

## Part 3–Authorized Agent or Contact

Person authorized to represent the applicant about the project. (Note: Authorized agent(s) must sign 11b of this application.) [help]

| **3a.** Name (Last, First, Middle) | | | |
|---|---|---|---|
| Kevin Anderson | | | |
| **3b.** Organization (If applicable) | | | |
| Port of Anacortes | | | |
| **3c.** Mailing Address (Street or PO Box) | | | |
| 317 Commercial | | | |
| **3d.** City, State, Zip | | | |
| Anacortes, WA 98221 | | | |
| **3e.** Phone (1) | **3f.** Phone (2) | **3g.** Fax | **3h.** E-mail |
| 360-293-3134 | | | |

## Part 4–Property Owner(s)

Contact information for people or organizations owning the property(ies) where the project will occur. Consider both **upland and aquatic** ownership because the upland owners may not own the adjacent aquatic land. [help]

☒ Same as applicant. (Skip to Part 5.)

☐ Repair or maintenance activities on existing rights-of-way or easements. (Skip to Part 5.)

☐ There are multiple upland property owners. Complete the section below and fill out JARPA Attachment A for each additional property owner.

☐ Your project is on Department of Natural Resources (DNR)-managed aquatic lands. If you don't know, contact the DNR at (360) 902-1100 to determine aquatic land ownership. If yes, complete JARPA Attachment E to apply for the Aquatic Use Authorization.

| **4a.** Name (Last, First, Middle) | | | |
|---|---|---|---|
| | | | |
| **4b.** Organization (If applicable) | | | |
| | | | |
| **4c.** Mailing Address (Street or PO Box) | | | |
| | | | |
| **4d.** City, State, Zip | | | |
| | | | |
| **4e.** Phone (1) | **4f.** Phone (2) | **4g.** Fax | **4h.** E-mail |
| | | | |

## Part 5–Project Location(s)

Identifying information about the property or properties where the project will occur. [help]

☐ There are multiple project locations (e.g. linear projects). Complete the section below and use JARPA Attachment B for each additional project location.

**5a.** Indicate the type of ownership of the property. (Check all that apply.) [help]

☐ Private
☐ Federal
☒ Publicly owned (state, county, city, special districts like schools, ports, etc.)
☐ Tribal
☐ Department of Natural Resources (DNR) – managed aquatic lands (Complete JARPA Attachment E)

**5b.** Street Address (Cannot be a PO Box. If there is no address, provide other location information in 5p.) [help]

116 O Avenue

**5c.** City, State, Zip (If the project is not in a city or town, provide the name of the nearest city or town.) [help]

Anacortes, WA 98221

**5d.** County [help]

Skagit

**5e.** Provide the section, township, and range for the project location. [help]

| ¼ Section | Section | Township | Range |
|---|---|---|---|
| | 13 | 35 | 01 |

**5f.** Provide the latitude and longitude of the project location. [help]

- Example: 47.03922 N lat. / -122.89142 W long. (Use decimal degrees - NAD 83)

Latitude: 48.52154
Longitude: -122.61489

**5g.** List the tax parcel number(s) for the project location. [help]

- The local county assessor's office can provide this information.

P31510, P129811

**5h.** Contact information for all adjoining property owners. (If you need more space, use JARPA Attachment C.) [help]

| Name | Mailing Address | Tax Parcel # (if known) |
|---|---|---|
| Port of Anacortes | 317 Commercial Ave, Anacortes, WA 98221 | P55361 |
| Washington State DNR | MS 47027, Olympia, WA 98504-7027 | |
| City of Anacortes | PO Box 547, Anacortes, WA 98221 | |
| | | |

**5i.** List all wetlands on or adjacent to the project location. [help]

None

**5j.** List all waterbodies (other than wetlands) on or adjacent to the project location. [help]

Guemes Channel

**5k.** Is any part of the project area within a 100-year floodplain? [help]

☒ Yes ☐ No ☐ Don't know

**5l.** Briefly describe the vegetation and habitat conditions on the property. [help]

There is no observed upland or aquatic vegetation at Curtis Wharf. All vegetation known to occur is adjacent to Curtis Wharf. To the east of Curtis Wharf dune grasses and mixed herbaceous plants occur along the northern portion of Railroad Avenue. To the west of Curtis Wharf, common noxious weeds (common fennel, blackberry, and scotch broom occur) and are mixed with dune grass. No eelgrass is known to exist offshore at the site.

**5m.** Describe how the property is currently used. [help]

Curtis Wharf is used as a commercial pier primarily serving harbor craft and commercial vessels (large fishing vessels, articulated tug-barges, oil spill response vessels). The pier also houses a seafood processor and wholesaler.

**5n.** Describe how the adjacent properties are currently used. [help]

Adjacent upland uses are mostly industrial with marine laydown space, rope manufacturers, seafood processors. The sole exception is the adjacent Q'elech'ilhch Park, a public park in the Anacortes Parks system. Q'elech'ilhch Park is named after the village that Samish citizens created on these shores and remains an important cultural and public access point for the water.

**5o.** Describe the structures (above and below ground) on the property, including their purpose(s) and current condition. [help]

Curtis Wharf is an overwater pier that is 320-foot at the bullrail. The pier has sections that are constructed of treated wood piles, pile caps, stringers, and decking overlain with asphalt and portions that are constructed with steel pipe pile supporting cast-in-place pile caps and deck panels. A seafood processing plant is located at Curtis Wharf; this structure is a single skinned metal building. Reefer units, shipping containers, and portable buildings are also located on Curtis Wharf; the numbers and configuration of these change with the varied utilization of the pier. All structures are currently functional and in good condition.

**5p.** Provide driving directions from the closest highway to the project location, and attach a map. [help]

From I-5 in Burlington, take SR-20 West to Anacortes (14.2 miles). Turn north onto R Avenue (2.1 miles), R Avenue becomes Q Avenue after ~0.75 miles. Turn west onto 3rd Street continue for 1/8th mile. Turn north onto O Avenue, continue for 300 ft until you arrive at the destination.

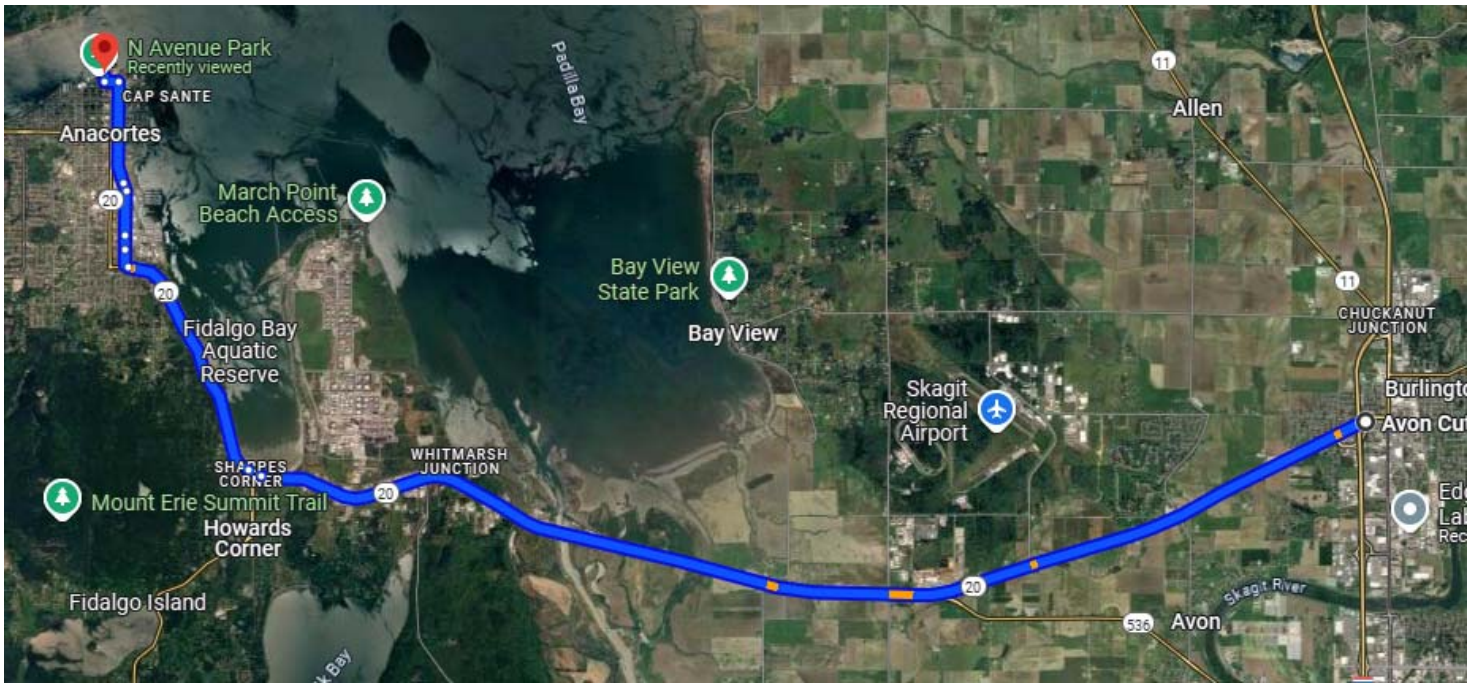


## Part 6–Project Description

**6a.** Briefly summarize the overall project. You can provide more detail in 6b. [help]

The Port proposes installation of a mobile shore power system and commercial blackwater pump out system at Curtis Wharf. A shore power system will allow vessels to "cold iron" while at berth reducing GHG emissions, diesel particulate matter, and noise to near-port communities. A commercial pump out facility permits vessels to discharge directly to the sanitary sewer system instead of either discharging black water at sea or a diesel powered utilizing a marine vacuum service empty their blackwater tanks. This project will not change or expand the current uses of Curtis Wharf and is designed to lessen the environmental burden on our shared resources.

**6b.** Describe the purpose of the project and why you want or need to perform it. [help]

The Port of Anacortes Marine Terminal is a deep-water port positioned strategically between Seattle, Washington, and Vancouver, British Columbia that services break bulk cargo, high and heavy projects and moorage services.

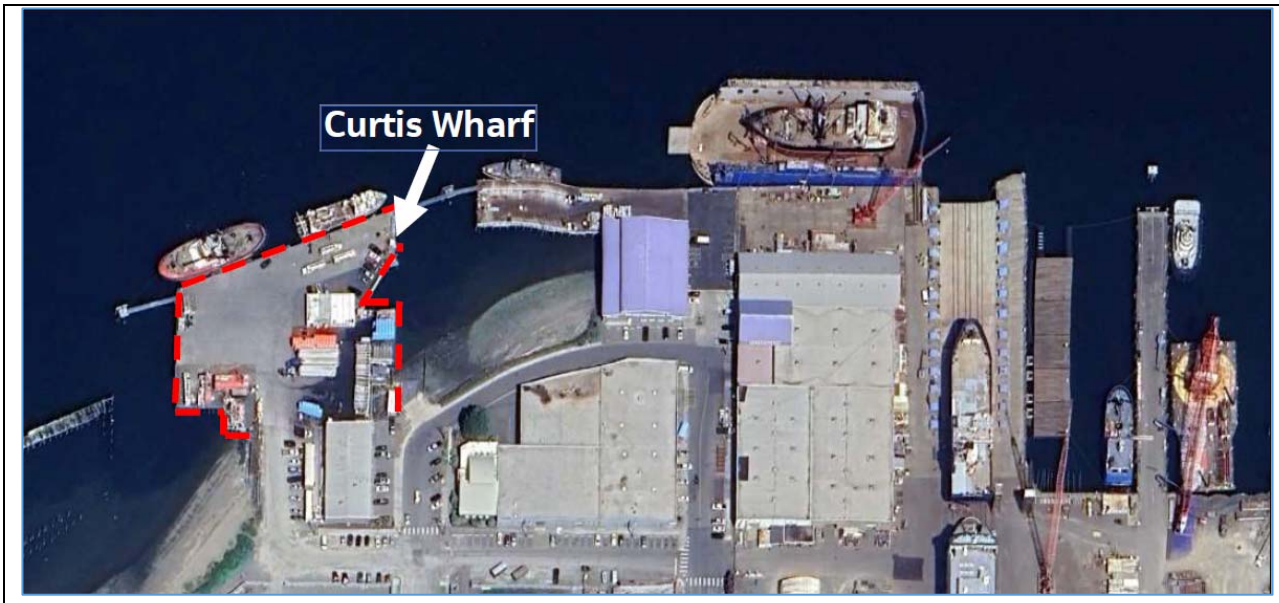


*Figure 1: Curtis Wharf Location*

The focal point of the project lies at Curtis Wharf (refer to Figure 1), nestled in the northwest corner of the Marine Terminal. Predominantly serving as a working wharf and dock for commercial harbor craft and ships, Curtis Wharf offers moorage facilities for up to two vessels simultaneously, with a wharf length extending to 320 ft, additional mooring dolphins 480 ft, and a depth of 24 ft at Mean Lower Low Water.

Curtis Wharf is heavily used by vessels in the Salish Sea with more than 400 tug calls, 50 days of cruise vessel berthing, and other harbor craft calling to fuel and water annually. The Port proposes providing additional amenities to vessels calling at Curtis Wharf to reduce the environmental burden of existing marine traffic at the Port of Anacortes. This work is supported by users and funded by appropriations from the State of Washington.

**6c.** Indicate the project category. (Check all that apply) [help]

☒ Commercial ☐ Residential ☐ Institutional ☒ Transportation ☐ Recreational
☐ Maintenance ☒ Environmental Enhancement

**6d.** Indicate the major elements of your project. (Check all that apply) [help]

| | | | |
|---|---|---|---|
| ☐ Aquaculture | ☐ Culvert | ☐ Float | ☐ Retaining Wall (upland) |
| ☐ Bank Stabilization | ☐ Dam / Weir | ☐ Floating Home | ☐ Road |
| ☐ Boat House | ☐ Dike / Levee / Jetty | ☐ Geotechnical Survey | ☐ Scientific Measurement Device |
| ☐ Boat Launch | ☐ Ditch | ☐ Land Clearing | ☐ Stairs |
| ☐ Boat Lift | ☐ Dock / Pier | ☐ Marina / Moorage | ☐ Stormwater facility |
| ☐ Bridge | ☐ Dredging | ☐ Mining | ☐ Swimming Pool |
| ☐ Bulkhead | ☐ Fence | ☐ Outfall Structure | ☒ Utility Line |
| ☐ Buoy | ☐ Ferry Terminal | ☐ Piling/Dolphin | |
| ☐ Channel Modification | ☐ Fishway | ☐ Raft | |

☐ Other:

**6e.** Describe how you plan to construct each project element checked in 6d. Include specific construction methods and equipment to be used. [help]

- Identify where each element will occur in relation to the nearest waterbody.
- Indicate which activities are within the 100-year floodplain.

Blackwater Pump out:
The proposed sewage collection design includes a pump mounted to the northeast corner of Curtis Wharf with an adjacent bypass force main connection for vessels with internal sewage ejection pumps. The pump will be installed inside a heated enclosure with an integrated hose rack. Vessels without internal sewage ejection pumps will utilize an integrated hose for connecting to the peristaltic pump. The pump, reel, and enclosure will be mounted to the deck of Curtis Wharf with bolts and/or epoxy.

The force main (4" HDPE pipe) will be suspended below the wharf by utility brackets, transitioning to buried piping where the wharf meets land. Utility brackets will be bolted to the underside of the pier. HDPE piping will be radio frequency (RF) welded into suitable lengths. Force main piping below the wharf will be gradually sloped towards land and vented to allow the system to drain residual sewage freely between uses, therefore freeze protection would not be necessary. The force main length is short enough that the pump would be capable of conveying sewage directly to the existing City sanitary sewer manhole in O Avenue/Railroad Avenue. The force main under the pier will penetrate the pier's bulkhead and transition to underground. The penetration will be made with a drill and a coring bit from the landward side to prevent materials from entering the water. The upland excavations for the pipe alignment will be made with an excavator and excavated materials will be hauled off with dump trucks. Fewer than 50 cubic yards of materials will be excavated from the uplands to facilitate the installation of the sewer line. If excavated materials are suitable, they will be reused to cover the excavation, if not suitable structural fill will be imported. Unsuitable materials will be disposed of at an appropriate upland site. TESC measures such as silt fences and protection on storm drain inlets will be put in place prior to construction to prevent materials from entering the water.

A flowmeter will be installed for billing purposes and a sampling hatch along the alignment of the force main for City staff to verify the strength of waste being discharged to the wastewater treatment plant. The location for this appurtenance has yet to be determined, but future iterations of design will finalize this detail.

Shore Power Pedestals:
To serve vessels calling at Curtis Wharf the Port will provide two 200-amp, 3-phase skid mounted shore power pedestals. There is sufficient electrical service at the site from the existing PSE transformers. The existing service switchboard and panelboard will be reused for these loads; however, several breakers will need to be replaced or updated at the panel. A skid-based system allows for increased operational flexibility at the site. The skid mounted pedestals will be located at the western and eastern edges of the Curtis Wharf bullrail. These will be mounted on a skid and easily moved with a forklift and have a automatically retracting reel to allow for flexible placement along the pier's face. The conduit run will be routed along the face of the bullrails using appropriate armored conduit for marine use. The final route and length of conduit will be determined during final design. Conduit will be affixed to the bullrail using conduit hangars and lag bolts appropriate for marine use. The conduit will terminate at the PSE transformer located at the directly southward and upland of Curtis Wharf.

**6f.** What are the anticipated start and end dates for project construction? (Month/Year) [help]

- If the project will be constructed in phases or stages, use JARPA Attachment D to list the start and end dates of each phase or stage.

Start Date: Fall 2025 End Date: Spring 2026 ☐ See JARPA Attachment D

| **6g.** Fair market value of the project, including materials, labor, machine rentals, etc. [help] |
|---|
| $1.5 million |
| **6h.** Will any portion of the project receive federal funding? [help]<br>• **If yes**, list each agency providing funds. |
| ☐ Yes ☒ No ☐ Don't know |

## Part 7–Wetlands: Impacts and Mitigation

☐ Check here if there are wetlands or wetland buffers on or adjacent to the project area.
(If there are none, skip to Part 8.) [help]

| **7a.** Describe how the project has been designed to avoid and minimize adverse impacts to wetlands. [help] |
|---|
| ☐ Not applicable |
| |
| **7b.** Will the project impact wetlands? [help] |
| ☐ Yes ☐ No ☐ Don't know |
| **7c.** Will the project impact wetland buffers? [help] |
| ☐ Yes ☐ No ☐ Don't know |
| **7d.** Has a wetland delineation report been prepared? [help]<br>• **If Yes**, submit the report, including data sheets, with the JARPA package. |
| ☐ Yes ☐ No |
| **7e.** Have the wetlands been rated using the Western Washington or Eastern Washington Wetland Rating System? [help]<br>• **If Yes**, submit the wetland rating forms and figures with the JARPA package. |
| ☐ Yes ☐ No ☐ Don't know |
| **7f.** Have you prepared a mitigation plan to compensate for any adverse impacts to wetlands? [help]<br>• **If Yes**, submit the plan with the JARPA package and answer 7g.<br>• **If No, or Not applicable**, explain below why a mitigation plan should not be required. |
| ☐ Yes ☐ No ☐ Don't know |
| |

**7g.** Summarize what the mitigation plan is meant to accomplish, and describe how a watershed approach was used to design the plan. [help]

**7h.** Use the table below to list the type and rating of each wetland impacted, the extent and duration of the impact, and the type and amount of mitigation proposed. Or if you are submitting a mitigation plan with a similar table, you can state (below) where we can find this information in the plan. [help]

| Activity (fill, drain, excavate, flood, etc.) | Wetland Name[1] | Wetland type and rating category[2] | Impact area (sq. ft. or Acres) | Duration of impact[3] | Proposed mitigation type[4] | Wetland mitigation area (sq. ft. or acres) |
|---|---|---|---|---|---|---|
| | | | | | | |
| | | | | | | |
| | | | | | | |
| | | | | | | |
| | | | | | | |

[1] If no official name for the wetland exists, create a unique name (such as "Wetland 1"). The name should be consistent with other project documents, such as a wetland delineation report.
[2] Ecology wetland category based on current Western Washington or Eastern Washington Wetland Rating System. Provide the wetland rating forms with the JARPA package.
[3] Indicate the days, months or years the wetland will be measurably impacted by the activity. Enter "permanent" if applicable.
[4] Creation (C), Re-establishment/Rehabilitation (R), Enhancement (E), Preservation (P), Mitigation Bank/In-lieu fee (B)

Page number(s) for similar information in the mitigation plan, if available: _____

**7i.** For all filling activities identified in 7h, describe the source and nature of the fill material, the amount in cubic yards that will be used, and how and where it will be placed into the wetland. [help]

**7j.** For all excavating activities identified in 7h, describe the excavation method, type and amount of material in cubic yards you will remove, and where the material will be disposed. [help]

## Part 8–Waterbodies (other than wetlands): Impacts and Mitigation

In Part 8, "waterbodies" refers to non-wetland waterbodies. (See Part 7 for information related to wetlands.) [help]

☒ Check here if there are waterbodies on or adjacent to the project area. (If there are none, skip to Part 9.)

**8a.** Describe how the project is designed to avoid and minimize adverse impacts to the aquatic environment. [help]

☐ Not applicable

During operation phases of the project, there should not be any impacts to waterbodies. The operation of the shore power will reduce the amount of in-water noise that the Guemes Channel receives by allowing berthed vessels to power down their generators and engines. The pump out will reduce the amount of marine sewage discharged to the Salish Sea. Though there is a small risk of spillage when vessels pump out, this risk will be managed by having unambiguous and clear pump out BMPs posted for mariners. At a minimum, the pump out BMPs will include operation instructions, numbers to call in case of spills, and prohibitions on discharging chemicals/oil products. This project is designed to serve current levels of marine traffic calling at Curtis Wharf and will not increase the numbers of vessel trips.

During the construction phase of the project, construction BMPs will be in place to prevent impacts to the marine waters. As the project is overwater, BMPs to prevent spills or materials entering the water will be in place. These may include measures such as no fueling vehicles or equipment on the pier, use of staging or catchments while drilling to prevent concrete debris or wood chips from entering the water, and working only during permitted work in-water work windows.

**8b.** Will your project impact a waterbody or the area around a waterbody? [help]

☐ Yes ☒ No

**8c.** Have you prepared a mitigation plan to compensate for the project's adverse impacts to non-wetland waterbodies? [help]

- **If Yes**, submit the plan with the JARPA package and answer 8d.
- **If No, or Not applicable,** explain below why a mitigation plan should not be required.

☐ Yes ☒ No ☐ Don't know

**8d.** Summarize what the mitigation plan is meant to accomplish. Describe how a watershed approach was used to design the plan.

- If you already completed 7g you do not need to restate your answer here. [help]

**8e.** Summarize impact(s) to each waterbody in the table below. [help]

| Activity (clear, dredge, fill, pile drive, etc.) | Waterbody name[1] | Impact location[2] | Duration of impact[3] | Amount of material (cubic yards) to be placed in or removed from waterbody | Area (sq. ft. or linear ft.) of waterbody directly affected |
|---|---|---|---|---|---|
| | | | | | |
| | | | | | |
| | | | | | |
| | | | | | |
| | | | | | |

[1] If no official name for the waterbody exists, create a unique name (such as "Stream 1") The name should be consistent with other documents provided.
[2] Indicate whether the impact will occur in or adjacent to the waterbody. If adjacent, provide the distance between the impact and the waterbody and indicate whether the impact will occur within the 100-year flood plain.
[3] Indicate the days, months or years the waterbody will be measurably impacted by the work. Enter "permanent" if applicable.

**8f.** For all activities identified in 8e, describe the source and nature of the fill material, amount (in cubic yards) you will use, and how and where it will be placed into the waterbody. [help]

NA

| **8g.** For all excavating or dredging activities identified in 8e, describe the method for excavating or dredging, type and amount of material you will remove, and where the material will be disposed. [help] |
|---|
| NA |

| **8h**. Have you prepared a Water Quality Monitoring Plan (WQMP) for all in-water work (below ordinary high water), over water work or discharges to waters of the state?<br>☐ Yes ☒ No<br>If NO describe the monitoring that you will be conducting including parameters, equipment and locations, or explain why monitoring will not be necessary. [help] |
|---|
| |

## Part 9–Additional Information

Any additional information you can provide helps the reviewer(s) understand your project. Complete as much of this section as you can. It is ok if you cannot answer a question.

**9a.** If you have already worked with any government agencies on this project, list them below. [help]

| Agency Name | Contact Name | Phone | Most Recent Date of Contact |
|---|---|---|---|
| Anacortes Planning Department | Grace Pollard | 360-293-1901 | August 2024 |
| WSDOT | Jason Huotoari | 509-324-6272 | January 2025 |
| Department of Commerce | Emily Hafford | 360-764-0118 | December 2024 |

**9b.** Are any of the wetlands or waterbodies identified in Part 7 or Part 8 of this JARPA on the Washington Department of Ecology's 303(d) List? [help]

- **If Yes,** list the parameter(s) below.
- If you don't know, use Washington Department of Ecology's Water Quality Assessment tools at: https://ecology.wa.gov/Water-Shorelines/Water-quality/Water-improvement/Assessment-of-state-waters-303d.

☒ Yes ☐ No

Waters of the Guemes Channel are listed as a 303(d) impaired water body for 2,3,7,8-TCDD (Dioxin). Ecology Listing ID: 64467

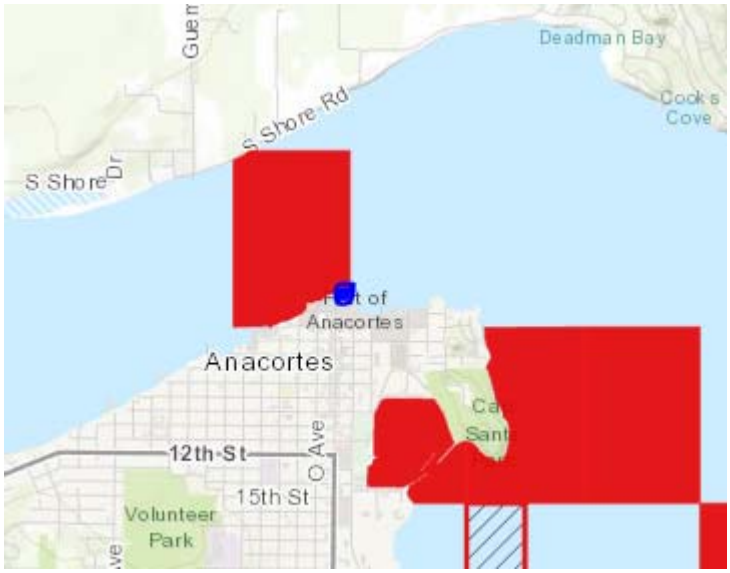


**Figure 2: Listing ID: 64467 and project location (blue dot)**

https://apps.ecology.wa.gov/approvedwqa/approvedpages/viewapprovedlisting.aspx?ListingId=64467

**9c.** What U.S. Geological Survey Hydrological Unit Code (HUC) is the project in? [help]

- Go to http://cfpub.epa.gov/surf/locate/index.cfm to help identify the HUC.

HUC 17110002

**9d.** What Water Resource Inventory Area Number (WRIA #) is the project in? [help]

- Go to https://ecology.wa.gov/Water-Shorelines/Water-supply/Water-availability/Watershed-look-up to find the WRIA #.

WRIA 3

**9e.** Will the in-water construction work comply with the State of Washington water quality standards for turbidity? [help]

- Go to https://ecology.wa.gov/Water-Shorelines/Water-quality/Freshwater/Surface-water-quality-standards/Criteria for the standards.

☒ Yes ☐ No ☐ Not applicable

**9f.** If the project is within the jurisdiction of the Shoreline Management Act, what is the local shoreline environment designation? [help]

- If you don't know, contact the local planning department.
- For more information, go to: https://ecology.wa.gov/Water-Shorelines/Shoreline-coastal-management/Shoreline-coastal-planning/Shoreline-laws-rules-and-cases.

☐ Urban ☐ Natural ☐ Aquatic ☐ Conservancy ☒ Other: Urban Maritime

**9g.** What is the Washington Department of Natural Resources Water Type? [help]

- Go to http://www.dnr.wa.gov/forest-practices-water-typing for the Forest Practices Water Typing System.

☒ Shoreline ☐ Fish ☐ Non-Fish Perennial ☐ Non-Fish Seasonal

**9h.** Will this project be designed to meet the Washington Department of Ecology's most current stormwater manual? [help]

- **If No**, provide the name of the manual your project is designed to meet.

☒ Yes ☐ No

Name of manual: 2019 WWSWM

**9i.** Does the project site have known contaminated sediment? [help]

- **If Yes**, please describe below.

☐ Yes ☒ No

**9j.** If you know what the property was used for in the past, describe below. [help]

The site has been used as a commercial pier for more than a century. Uses at the pier include loading materials, the former terminus for mosquito fleet ferries, a fueling and coaling dock, ship repair, seafood landing, seafood wholesale and processing, and mariner training activities. The nearby uplands also have supported these uses. Prior to development the shore of the Guemes Channel was undeveloped and used by the Samish Indian Nation as seasonal settlement.

**9k.** Is the project located in or adjacent to a designated state or federal contaminated site or clean-up site. (e.g. MTCA or CERCLA)?

- **If Yes**, provide any additional details below.

☒ Yes ☐ No

Just south of the Curtis Wharf is the Quiet Cove Cleanup Site. This a w MTCA listed site. Facility ID 20859 Cleanup Site ID 12482

https://apps.ecology.wa.gov/cleanupsearch/site/12482

**9l.** Has a cultural resource (archaeological) survey been performed on the project area? [help]

- **If Yes**, attach it to your JARPA package.

☐ Yes ☒ No

| **9m.** Name each species listed under the federal Endangered Species Act that occurs in the vicinity of the project area or might be affected by the proposed work. [help] |
|---|
| • Puget Sound Chinook Salmon (*Oncorhynchus tshawytscha)*<br>• Coastal-Puget Sound Bull Trout (*Salvelinus confluentus)*<br>• Puget Sound Steelhead Trout (*Oncorhynchus mykiss)*<br>• Bocaccio (*Sebastes paucispinis*)<br>• Yelloweye rockfish (*Sebastes ruberrimus*)<br>• Southern Resident Killer Whale (*Orcinus orca)*<br>• Humpback Whale (*Megaptera novaeangliae)*<br>• Leatherback Sea Turtle (*Dermochelys coriacea)*<br>• Marbled Murrelet (*Brachyramphus marmoratus)* |
| **9n.** Name each species or habitat on the Washington Department of Fish and Wildlife's Priority Habitats and Species List that might be affected by the proposed work. [help] |
| PHS web mapper (accessed 1/15/2025) lists Dungeness crab and *Yuma myotis* as listed species found in the area. The project will not affect these species as designed. |

## Part 10–SEPA Compliance and Permits

Use the resources and checklist below to identify the permits you are applying for.

- Online Project Questionnaire at http://apps.oria.wa.gov/opas/.
- Governor's Office for Regulatory Innovation and Assistance at (800) 917-0043 or help@oria.wa.gov.
- For a list of addresses to send your JARPA to, click on agency addresses for completed JARPA.

| **10a.** Compliance with the State Environmental Policy Act (SEPA). (Check all that apply.) [help]<br>• For more information about SEPA, go to https://ecology.wa.gov/regulations-permits/SEPA-environmental-review. |
|---|
| ☒ A copy of the SEPA determination or letter of exemption is included with this application. |
| ☐ A SEPA determination is pending with _____ (lead agency). The expected decision date is _____. |
| ☐ I am applying for a Fish Habitat Enhancement Exemption. (Check the box below in 10b.) [help] |
| ☐ This project is exempt (choose type of exemption below).<br>☐ Categorical Exemption. Under what section of the SEPA administrative code (WAC) is it exempt? _____<br>☐ Other: _____ |
| ☐ SEPA is pre-empted by federal law. |

**10b.** Indicate the permits you are applying for. (Check all that apply.) [help]

**LOCAL GOVERNMENT**

**Local Government Shoreline permits:**

☒ Substantial Development ☐ Conditional Use ☐ Variance

☐ Shoreline Exemption Type (explain): _____

**Other City/County permits:**

☐ Floodplain Development Permit ☐ Critical Areas Ordinance

**STATE GOVERNMENT**

**Washington Department of Fish and Wildlife:**

☒ Hydraulic Project Approval (HPA) ☐ Fish Habitat Enhancement Exemption – Attach Exemption Form

**Washington Department of Natural Resources:**

☐ Aquatic Use Authorization

Complete JARPA Attachment E and submit a check for $25 payable to the Washington Department of Natural Resources. **Do not send cash.**

**Washington Department of Ecology:**

☐ Section 401 Water Quality Certification

☐ Authorization to impact waters of the state, including wetlands (Check this box if the proposed impacts are to waters not subject to the federal Clean Water Act)

**FEDERAL AND TRIBAL GOVERNMENT**

**United States Department of the Army (U.S. Army Corps of Engineers):**

☐ Section 404 (discharges into waters of the U.S.) ☒ Section 10 (work in navigable waters)

**United States Coast Guard:**
For projects or bridges over waters of the United States, contact the U.S. Coast Guard at:

☐ Bridge Permit: D13-SMB-D13-BRIDGES@uscg.mil

☐ Private Aids to Navigation (or other non-bridge permits): D13-SMB-D13-PATON@uscg.mil

**United States Environmental Protection Agency:**

☐ Section 401 Water Quality Certification (discharges into waters of the U.S.) on tribal lands where tribes do not have treatment as a state (TAS)

**Tribal Permits:** (Check with the tribe to see if there are other tribal permits, e.g., Tribal Environmental Protection Act, Shoreline Permits, Hydraulic Project Permits, or other in addition to CWA Section 401 WQC)

☐ Section 401 Water Quality Certification (discharges into waters of the U.S.) where the tribe has treatment as a state (TAS).

## Part 11–Authorizing Signatures

Signatures are required before submitting the JARPA package. The JARPA package includes the JARPA form, project plans, photos, etc. [help]

**11a.** Applicant Signature (required) [help]

I certify that to the best of my knowledge and belief, the information provided in this application is true, complete, and accurate. I also certify that I have the authority to carry out the proposed activities, and I agree to start work only after I have received all necessary permits.

I hereby authorize the agent named in Part 3 of this application to act on my behalf in matters related to this application. _____ (initial)

By initialing here, I state that I have the authority to grant access to the property. I also give my consent to the permitting agencies entering the property where the project is located to inspect the project site or any work related to the project. kda (initial)

| Kevin Anderson | | 1/28/25 |
|---|---|---|
| Applicant Printed Name | Applicant Signature | Date |

**11b.** Authorized Agent Signature [help]

I certify that to the best of my knowledge and belief, the information provided in this application is true, complete, and accurate. I also certify that I have the authority to carry out the proposed activities and I agree to start work only after all necessary permits have been issued.

| | | |
|---|---|---|
| Authorized Agent Printed Name | Authorized Agent Signature | Date |

**11c.** Property Owner Signature (if not applicant) [help]

Not required if project is on existing rights-of-way or easements (provide copy of easement with JARPA).

I consent to the permitting agencies entering the property where the project is located to inspect the project site or any work. These inspections shall occur at reasonable times and, if practical, with prior notice to the landowner.

| | | |
|---|---|---|
| Property Owner Printed Name | Property Owner Signature | Date |

18 U.S.C §1001 provides that: Whoever, in any manner within the jurisdiction of any department or agency of the United States knowingly falsifies, conceals, or covers up by any trick, scheme, or device a material fact or makes any false, fictitious, or fraudulent statements or representations or makes or uses any false writing or document knowing same to contain any false, fictitious, or fraudulent statement or entry, shall be fined not more than $10,000 or imprisoned not more than 5 years or both.

If you require this document in another format, contact the Governor's Office for Regulatory Innovation and Assistance (ORIA) at (800) 917-0043. People with hearing loss can call 711 for Washington Relay Service. People with a speech disability can call (877) 833-6341. ORIA publication number: ORIA-16-011 rev. 09/2018

# NOTICE OF NEIGHBORHOOD MEETING

A pre-application neighborhood meeting has been scheduled to introduce a potential project described below. The purpose of the meeting is to inform neighbors and interested parties about the potential project at an early stage and to foster communication between the applicant and the public regarding potential project issues and opportunities for solutions.

**PROJECT DESCRIPTION:** The Port of Anacortes is planning to install a mobile shore power system and commercial blackwater pump out system at Curtis Wharf. Connection to a shore power system while at berth will allow vessels to reduce fuel consumption and greenhouse gas (GHG) emissions, diesel particulate matter, and noise impacts to near-port communities. A commercial pump out facility permits vessels to discharge directly to the sanitary sewer system instead of either discharging black water at sea or a diesel-powered marine vacuum service to empty their blackwater tanks. This project will not change or expand the current use of Curtis Wharf.

**PROJECT LOCATION:** 1108 2nd Street, Anacortes, WA 98221

**MEETING LOCATION:** Fidalgo Meeting Room (317 Commercial Ave, Anacortes) or via Teams

**MEETING DATE & TIME:** April 24th, 2025 @ 6:00 PM

**HOW TO JOIN THE VIRTUAL MEETING: Scan the QR code below or go to anacorteswa.gov/1499/Community-Neighborhood-Meetings. You can also call in with audio only: +1 (469) 480-5036 (Phone Conference ID: 340 132 455#)**

**PROJECT APPLICANT**
Name **Kevin Anderson / Port of Anacortes**
Address **317 Commercial Ave, Anacortes, WA 98221**
Email / Phone # **360-770-5194**
Kevin.Anderson@portofanacortes.com

**WHO CAN ATTEND A NEIGHBORHOOD MEETING?**
Neighborhood meeting notices are posted on the project site, published in the Anacortes American Newspaper, and mailed to neighboring landowners located within 300-feet of the subject property. Anyone however is welcome to attend a neighborhood meeting whether a neighbor of the project or not.

**CAN I SUBMIT COMMENTS?**
Following a neighborhood meeting, if an applicant proceeds with the submittal of a land use permit application, public notice will be provided consistent with AMC requirements and a public hearing will be held, if applicable. Comments should be submitted during this phase of the project so that they become part of the record and taken into consideration by the decision maker.

# NOTICE OF APPLICATION including written comment period & NOTICE OF PUBLIC HEARING

**Project Name:** Curtis Wharf Shore Power and Pump Out
**File Number**: SDP-2025-0001
**Applicant:** Port of Anacortes
**Date of Application:** February 28, 2025
**Date of Completeness:** March 28, 2025
**Project Location**: 100 O Avenue – Curtis Wharf

## NOTICE IS HEREBY GIVEN THAT AN APPLICATION WAS MADE FOR THE FOLLOWING PROPOSAL:

The Port of Anacortes is seeking approval of a Shoreline Substantial Development Permit to install a mobile shore power system and commercial blackwater pump out system at Curtis Wharf. Connection to a shore power system while at berth will allow vessels to reduce their greenhouse gas (GHG) emissions, diesel particulate matter, and noise impacts to near-port communities. A commercial pump out facility permits vessels to discharge directly to the sanitary sewer system instead of either discharging black water at sea or a diesel-powered marine vacuum service to empty their blackwater tanks. This project will not change or expand the current uses of Curtis Wharf.

**State Environment Policy Act (SEPA) Review:** The Port of Anacortes, as lead agency, has determined that this project will not have a probable significant adverse impact on the environment; a determination of non-significance (DNS) does not require an environmental impact statement (EIS) under RCW 43.21C.030(2)(c). This determination was issued on November 6, 2024, and is on file with the Department of Ecology (SEPA #202404836).

**Environmental Documents on File:** Geotechnical Report, Fish and Wildlife Habitat Conservation Areas Assessment and Report, No Effects Evaluation, Joint Aquatic Resources Permit Application (JARPA) Form, and SEPA DNS & checklist.

**Required Project Permits/Approval:** City of Anacortes Floodplain Development Permit, right-of-way and sewer permits, WA State Department of Labor & Industries electrical permits, United States Army Corps of Engineers Letter of Permission, Hydraulic Project Approval from the Washington State Department of Fish & Wildlife.

**Public Comment Period**: The joint Notice of Application and Notice of Public Hearing was published on April 16, 2025. Written comments to be considered prior to the public hearing must be submitted to the contact person listed below by **5:00 PM on May 16, 2025**. Additional comments and verbal testimony will be accepted at the Planning Commission open-record pre-decision public hearing. These will be your only opportunities to comment on this project before the City Council closed-record decision meeting.

**Hearing Body: Planning Commission.** An open-record pre-decision hearing will be held by the Planning Commission on **May 28, 2025, at 6:00 pm** in Council Chambers (904 6th Street), and via Zoom video conferencing. **City Council** will hold a closed-record decision hearing on **Monday, June 9, 2025**.

- Virtual meeting participation instructions and connection information can be accessed at anacorteswa.gov/700. Hearings will be conducted in accordance with the rules of procedure adopted by the hearing body.
- Members of the public who require special assistance to participate in or access the public hearing may contact the City Clerk at 360-299-1960 24-hours before the hearing to make special arrangements.

**ANY PERSON HAS THE RIGHT TO RECEIVE NOTICE, PARTICIPATE IN ANY HEARINGS, AND REQUEST A COPY OF THE FINAL DECISION.**

**Document Availability:** Application documents may be reviewed by scanning the above QR Code or by going to https://ci-anacortes-wa.smartgovcommunity.com/Public/Home and clicking *Public Notices* then selecting file no. **SDP-2025-0001**. The staff report will be available by 2pm Wednesday May 21, 2025, one week before the scheduled open-record pre-decision hearing.

**City Contact:** Anna Dewey, AICP, Associate Planner; Email: annad@anacorteswa.gov Phone: (360)299-1984 Mail: City of Anacortes Planning Dept., P.O. Box 547, Anacortes, WA 98221
Written comments must be substantive and include the name and address of the commentor.

**Appeal:** Per AMC Table 19.20.030-1 Land Use decisions made by City Council do not have a local appeal process. Appeals of a Shoreline Substantial Development Permit decision must be made to the State Shorelines Hearings Board (SHB). Requests for review by the Hearings Board must be received by the Shoreline Hearings Board within twenty-one (21) days of the "date of filing." The "date of filing" for the purposes of an appeal is the date that the Department of Ecology (DOE) receives the city's final decision.

April 11, 2025

1:2,257

**Legend**

- County Boundary
- Tax Parcels
- Pre Tax Account Property

0 0.0175 0.035 0.07 mi

0 0.03 0.06 0.12 km

**Data Accuracy Warning:** All GIS data was creat[illegible] from available public records and existing map sources. Map features have be[illegible]en ad[illegible]st-fit registration. While great care was taken in this p[illegible]cess, maps [illegible] rarely agree as to the precise location of geograp[illegible] be as great as 300 feet.

Copyright 2024

**Exhibit # L**
**Page 4 of 5**

| PNumber | OwnerName | OwnerAdd1 | OwnerAdd2 | OwnerAdd3 | OwnerCity | OwnerState | OwnerZip | SitusStNo | SitusStName | SitusCSZ | |
|---|---|---|---|---|---|---|---|---|---|---|---|
| P129811 | PACIFIC DREAM SEAFOOD INC | | | 830 KLINE ROAD | BELLINGHAM | WA | 98226 | 116 | O AVE | ANACORTES | WA 98221 |
| P31510 | PORT OF ANACORTES | | | 317 COMMERCIAL AVE | ANACORTES | WA | 98221 | 116 | O AVENUE | ANACORTES | WA 98221 |
| P31511 | TRIDENT SEAFOOD CORP- TREASURY DEPT | 5303 SHILSHOLE AVE NW | | | SEATTLE | WA | 98107 | | | | |
| P31512 | CITY OF ANACORTES | | PO BOX 547 | | ANACORTES | WA | 98221 | | | | |
| P32866 | PORT OF ANACORTES | | | 317 COMMERCIAL AVE | ANACORTES | WA | 98221 | 100 | COMMERCIAL AVENUE | ANACORTES | WA 98221 |
| P55032 | PORT OF ANACORTES | | | 317 COMMERCIAL AVE | ANACORTES | WA | 98221 | | | | |
| P55033 | PORT OF ANACORTES | | | 317 COMMERCIAL AVE | ANACORTES | WA | 98221 | 1012 | 2ND ST | ANACORTES | WA 98221 |
| P55034 | PORT OF ANACORTES | | | 317 COMMERCIAL AVE | ANACORTES | WA | 98221 | 100 | COMMERCIAL AV | ANACORTES | WA 98221 |
| P55035 | PORT OF ANACORTES | 100 COMMERCIAL AVE | | | ANACORTES | WA | 98221 | 1008 | 3RD STREET | ANACORTES | WA 98221 |
| P55036 | PORT OF ANACORTES | 100 COMMERCIAL AVE | | | ANACORTES | WA | 98221 | 1008 | 3RD STREET | ANACORTES | WA 98221 |
| P55037 | PORT OF ANACORTES | 100 COMMERCIAL AVE | | | ANACORTES | WA | 98221 | 1008 | 3RD STREET | ANACORTES | WA 98221 |
| P55345 | PORT OF ANACORTES | | | 317 COMMERCIAL AVE | ANACORTES | WA | 98221 | 1111 | 3RD ST | ANACORTES | WA 98221 |
| P55346 | PORT OF ANACORTES | 100 COMMERCIAL AVE | | | ANACORTES | WA | 98221 | 1117 | 3RD ST | ANACORTES | WA 98221 |
| P55354 | PORT OF ANACORTES | | 100 COMMERCIAL AVE | | ANACORTES | WA | 98221 | 202 | O AV | ANACORTES | WA 98221 |
| P55355 | PORT OF ANACORTES | | | 317 COMMERCIAL AVE | ANACORTES | WA | 98221 | 100 | O AV | ANACORTES | WA 98221 |
| P55357 | GUEMES CHANNEL CORP | | PO BOX 409 | | ANACORTES | WA | 98221 | 1110 | 3RD ST | ANACORTES | WA 98221 |
| P55358 | PORT OF ANACORTES | | 100 COMMERCIAL AVE | | ANACORTES | WA | 98221 | | | | |
| P55359 | PORT OF ANACORTES | | 100 COMMERCIAL AVE | | ANACORTES | WA | 98221 | | | | |
| P55360 | GN OP PROP | | | | | | | | | | |
| P55361 | PORT OF ANACORTES | | | 317 COMMERCIAL AVE | ANACORTES | WA | 98221 | 116 | O AVENUE | ANACORTES | WA 98221 |
| P55363 | TRIDENT SEAFOOD CORP- TREASURY DEPT | 5303 SHILSHOLE AVE NW | | | SEATTLE | WA | 98107 | | | | |
| P55365 | CITY OF ANACORTES | | PO BOX 547 | | ANACORTES | WA | 98221 | | | | |
| P55367 | TRIDENT SEAFOOD CORP- TREASURY DEPT | 5303 SHILSHOLE AVE NW | | | SEATTLE | WA | 98107 | | | | |
| P55368 | TRIDENT SEAFOOD CORP- TREASURY DEPT | 5303 SHILSHOLE AVE NW | | | SEATTLE | WA | 98107 | | | | |

**Exhibit # L**
**Page 5 of 5**

CITY OF ANACORTES

# PLANNING COMMISSION

## Findings of Fact, Conclusions of Law & Recommendation

| | |
|---|---|
| PROJECT FILE NUMBER | SDP-2025-0001 |
| PROJECT NAME | Port of Anacortes Curtis Wharf Upgrades |
| PROJECT LOCATION | 1108 2nd Street, Anacortes WA 98221 (APN: P31510) |
| PROJECT DESCRIPTION | The Port of Anacortes has requested a shoreline substantial development permit for the installation of a mobile shore power system and commercial blackwater pump out system at Curtis Wharf. Connection to a shore power system while at berth will allow vessels to reduce their greenhouse gas (GHG) emissions, diesel particulate matter, and noise impacts to near-port communities. A commercial pump out facility permits vessels to discharge directly to the sanitary sewer system instead of either discharging black water at sea or using a diesel-powered marine vacuum service to empty their blackwater tanks. This project will not change or expand the current use of Curtis Wharf, and there are no structural modifications associated with this work. All work will be done within existing disturbed/developed areas. |
| APPLICANT / PROPERTY OWNER | Port of Anacortes, 317 Commercial Ave, Anacortes WA – Kevin Anderson / kevin.anderson@portofanacortes.com |
| PUBLIC HEARING BODY | Anacortes Planning Commission / May 28, 2025 |
| PC DELIBERATION | Approve with Conditions / Wednesday, May 28, 2025 |
| DECISION BODY | Anacortes City Council |
| CLOSED RECORD HEARING DATE | Monday, June 9, 2025 |
| EXHIBITS | A. Application Checklist<br>B. Agent Authorization Form<br>C. Project Narrative<br>D. DOE Design Considerations<br>E. SEPA Environmental Checklist & DNS<br>F. Shoreline Development Plan Set<br>G. Fish & Wildlife Habitat Conservation Area Assessment & Report<br>H. No Effects Evaluation |

| | |
|---|---|
| | I. Geotechnical Letter Report<br>J. Stormwater Drainage Report Minimum Requirement No. 2 (SWPPP)<br>K. JARPA Application Form<br>L. Notices |

Application documents may be accessed via the online permit portal: https://ci-anacortes-wa.smartgovcommunity.com/PublicNotice/PublicNoticeHome

After considering the written and spoken comments and considering the record before it, the Planning Commission enters the following findings of fact, conclusions of law, and recommendation:

## FINDINGS OF FACT & CONCLUSIONS OF LAW

1. The staff report dated May 22, 2025, accurately describes the project proposal and is hereby incorporated by reference.
2. The following members of the public provided testimony during the public hearing:
   a.
3. The following additional exhibits were entered into the record at the public hearing:
   a.
4. The following additional Findings of Fact and/or Conclusions of Law are entered:
   a.

## RECOMMENDATION

Based upon the foregoing findings and conclusions of law, and review of the City's regulatory authority to implement the policies, standards, and regulations of the Anacortes Municipal Code and the Anacortes Shoreline Master Program the Planning Commission hereby makes the following recommendation regarding the subject Shoreline Substantial Development Permit (SDP) application:

☒ Approve with Conditions
☐ Approve
☐ Deny

Subject to staff's recommended conditions in the Staff Report dated November 7, 2024 and any additional Commissioner conditions of approval as listed below:

1. *None*

| Commission Vote | Support | Oppose | Absent | Abstain |
|---|---|---|---|---|
| Frank Jeretsky | | | | |
| James Stoneman | | | | |
| Linda Martin, Chair | | | | |
| Luke Currier | | | | |
| Michael Mills | | | | |
| Paul Ryan | | | | |

| | | | | |
|---|---|---|---|---|
| William McCombs | | | | |
| **Total** | | | | |

ANACORTES PLANNING COMMISSION
ANACORTES, WASHINGTON

_____ _____

Linda Martin, Planning Commission Chair Date

# Planning Commission Agenda Bill

**Meeting Date:** May 28, 2025 **Agenda Item:** 5.b.

**Subject:** 2025 Comprehensive Plan Update - Proposed amendments to the goals and policies of the Economic Development and Parks, Recreation & Open Space elements (Public Hearing)
**Staff Contact:** John Coleman, Libby Grage

| **Approved for Submittal to Commission by** | **Action Type** |
|---|---|
| Libby Grage<br>John Coleman | Public Hearing |

**Summary Statement:** On May 28, 2025 the Planning Commission is holding a public hearing on proposed amendments to the goals and policies of the Economic Development and Parks, Recreation & Open Space elements of the Comprehensive Plan.

The proposed amendments were reviewed by the Planning Commission at their May 14, 2025 meeting. The draft amendments, with the Planning Commission's suggested changes, are included with this packet in the documents titled "Economic Development Goals & Policies Update Tracker" and "Parks, Recreation, & Open Space Goals & Policies Update Tracker".

No formal recommendations or final decisions about the goals and policies of the Economic Development and Parks, Recration & Open Space elements will be made at this meeting. The information gathered will be used to help update the elements further. Staff will bring the revised elements back to the Plannign Commisison later in 2025 for further public review and public hearings.

**Background:**
**Previous Action:** 5/14/25 PC Meeting
**Competing Viewpoints Considered:** The purpose of the public hearing is to gather public comments on the drafts.
**Recommended Motion:** None - discussion only.
**Alternative Actions:** N/A
**Attachments (listed in order presented):**

1. Economic Development Goals & Policies Update Tracker
2. Parks, Recreation, & Open Space Goals & Policies Update Tracker
3. Public Comments Received 5/14/25-5/28/25

# Anacortes Comprehensive Plan Update
# Economic Development Goals and Policies Tracker

**DRAFT January 21, 2025**

May 14, 2025 Planning Commission Suggested Changes Version

The Planning Commission reviewed the 1st draft proposed amendments at their May 14, 2025 meeting. The Planning Commission's suggested changes to the 1st draft, if any, are highlighted in yellow.

## Introduction

This tracker contains suggested updates to the 2016 Anacortes Comprehensive Plan Economic Development Goals & Policies based on Leland Consulting Group (LCG)'s audit of the existing Goals & Policies as well as information in the Economic Development Background Report, Western Washington Economic Development Study and staff input. Key takeaways from the audit of Economic Development Goals & Policies are found below:

**Economic Development**

- The structure of the goals and policies remains a relevant and useful framework – starting with a balanced and diverse economy, commercial businesses that serve local needs, tourism, and growth sectors.
- Many of the policies remain relevant and are useful to retain going forward.
- There are several recommendations to consider consolidating goals and policies with one another, where the intent may be quite similar.
- There are several policies where more specifics would be useful, such as specific industries or businesses or specific entities the City should partner with on strategy development.

## Economic Development Element

| Goal or Policy | Existing Page Number | Existing Goal or Policy Text | First Draft Proposed Policy Revision<br>*The policies will undergo at least another round of revisions before their estimated final adoption in 2025* | Reasoning for Proposed Policy Change |
|---|---|---|---|---|
| **Goal ED-1** | | **Balanced Economy. Foster a balanced, diversified and sustainable local economy that contributes to Anacortes's high quality of life.** | Retain | |
| Policy ED-1.1 | | Pursue a balanced economy through the protection and enhancement of the community's natural, historical, and cultural amenities, and the improvement of the well-being of its residents. | Retain | |
| Policy ED-1.2 | | Promote economic resilience by encouraging a diversity of businesses not reliant on a single business sector or large employer. Include strategies for increasing business sector diversity in the economic development strategic plan. | Retain | |
| Policy ED-1.3 | | Provide a stable tax base to support the costs of desired public facilities and services. | Retain | |
| Policy ED-1.4 | | Encourage expansion of existing employers and attraction of new employers that pay wages sufficient to support family households and fund needed public services. | Retain | |
| Policy ED-1.5 | | Support existing commercial, manufacturing and industrial enterprises as a vital part of Anacortes's economy. | Retain | |
| Policy ED-1.6 | | Facilitate the retention, growth and new location of small and locally-owned business. | Facilitate the retention, growth and new location of small and locally-owned business, through marketing, technical assistance, allowing live-work units, and/or providing incubator or kitchen spaces for microenterprise~~.~~ | Combined with ED-2.11, also added mention of live-work units to consolidate with Policy ED-1.11. Added mention of kitchen space per Planning Commission 5/14 meeting |
| Policy ED-1.7 | | Encourage low-impact home-based businesses in residential areas. | Retain | |
| Policy ED-1.8 | | Invest in public facilities and services that improve business conditions and quality of life and are affordable to residents and businesses. | Invest in public facilities and services, including high-capacity fiber broadband, that improve business conditions and quality of life and are affordable to residents and businesses. | Added fiber internet per Planning Commission 5/14 meeting. |
| Policy ED-1.9 | | Attract a diverse population, including artists, innovators, and families that contribute to a vibrant multigenerational community. | Collaborate with the Anacortes Creative District to foster the growth of Anacortes' creative economy through recruitment and support of creative and artistic businesses, supporting the Anacortes Arts Festival and additional arts and cultural events, and marketing Anacortes as a destination for art and culture. | Focus policy specifically on arts and creative economy. |
| Policy ED-1.10 | | Support the development of an adequate range of affordable housing opportunities for the local workforce to increase the attractiveness of the city to employers. | Support the development of ~~an adequate range of~~ a variety of housing types that can serve all income levels throughout the city, ~~affordable housing opportunities for the local workforce to increase~~ to facilitate workforce housing affordability and increase the attractiveness of the city to employers and creative economy employees.~~.~~ | Adjusted language to better match new housing legislation terminology and requirements. |
| ~~Policy ED-1.11~~ | | ~~Allow for live/work opportunities as described in the Land Use Element to expand options for small or startup businesses.~~ | **Consolidate** | Added mention of live-work units to consolidate with ED-1.6. |
| Policy ED-1.12 | | Develop a strategic plan for economic development in coordination with local stakeholders, such as the Port of Anacortes. | Develop a strategic plan for economic development in coordination with local stakeholders, ~~such as the Port of Anacortes~~and work with local businesses and non-profits to implement the findings and recommendations of the plan. | The city is in the process of completing such a strategic plan. Suggest eliminating reference to the Port because there are many relevant stakeholders besides the Port. Added language to encourage follow-up activities to actuate the findings of the economic development strategic plan. |
| Policy ED-1.13 | | Engage in frequent communication with local businesses and resources outside the region to better understand industry trends, cooperatively plan for future needs and work toward common goals. | Retain | |

| Goal or Policy | Existing Page Number | Existing Goal or Policy Text | First Draft Proposed Policy Revision<br>*The policies will undergo at least another round of revisions before their estimated final adoption in 2025* | Reasoning for Proposed Policy Change |
|---|---|---|---|---|
| ~~Policy ED-1.14~~ | | ~~Provide state of the art broadband infrastructure, including high-capacity fiber optic cable, for business, education, public affairs, and consumer uses.~~ | **Consolidate** | Consolidated with ED-1.8 |
| Policy ED- | | | Coordinate with regional economic development organizations to ~~I~~identify and encourage development of industry clusters that can share technologies, facilities and labor resources. | Moved from ED-5.1 |
| Policy ED- | | | Attract knowledge-based enterprises offering alternative technologies and services, including green industries such as environmental services and energy technologies. | Moved from ED-5.2 |
| | | | Support expansion of local medical care facilities as sources of jobs and income, as well as support services to the community. | Moved from ED-5.3 |
| **Goal ED-2** | | **Retail & Commercial. Enhance commercial businesses which serve the community's needs for goods and services.** | **Retail & Commercial. ~~Enhance~~ Retain and grow commercial businesses which serve the community's needs for goods and services.** | Adjusted language to clarify actions rather than the more vague "enhance" |
| Policy ED-2.1 | | Encourage residents to support local businesses and keep money within the community. | Through the forthcoming economic strategic plan, incentives, marketing, and other work, promote the formation and support of local businesses that serve the needs of residents and visitors – such as small specialty retailers, mercantile, and the provision of community spaces – in order to retain money within the community. | Combined ED-2.1, 2.2, 2.3, 2.4, and 2.6 here and added specificity of how city might support local businesses. |
| ~~Policy ED-2.2~~ | | ~~Strive to recapture local household spending that currently goes to businesses in surrounding communities.~~ | **Consolidate** | Consolidated into ED-2.1 |
| ~~Policy ED-2.3~~ | | ~~Encourage new businesses, such as small specialty retailers, mercantile, or complementary brand retailer, that provide goods not currently available within the community.~~ | **Consolidate** | Consolidated into ED-2.1 |
| ~~Policy ED-2.4~~ | | ~~Encourage new businesses that serve local residents as well as visitors.~~ | **Consolidate** | Consolidated into ED-2.1 |
| Policy ED-2.5 | | Promote the development of uses, such as high density residential and overnight accommodations, that maintain or increase shopper density within the Central Business District. | Retain | |
| ~~Policy ED-2.6~~ | | ~~Encourage uses that provide gathering and meeting places.~~ | **Consolidate** | Consolidated into ED-2.1 |
| ~~Policy ED-2.7~~ | | ~~Consider implementing limits on non-retail uses in core Central Business District areas after careful review of successful implementations elsewhere.~~ | **Remove** | In reviewing AMC Table 19.41.050, it appears this policy was not pursued too strictly in the 2019 development regulation updates. A variety of non-retail uses such as day care, office, medical, and personal services are permitted in the CBD zone – and this is appropriate as commercial heart of Anacortes. This may also conflict with other policies. |
| Policy ED-2.8 | | Consider providing for small commercial nodes in noncommercial zones, where appropriate access is available, in order to expand local neighborhood access to goods and services. | Explore~~Consider providing~~ allowing ~~for~~ small commercial nodes in noncommercial zones, where appropriate access is available, in order to expand local neighborhood access to goods and services. | Changed "Consider" to "Explore" to be more proactive while retaining staff flexibility, per Planning Commission 5/14 meeting. |
| Policy ED-2.9 | | Encourage higher density residential development within and near the Central Business District as support for Downtown businesses. | Retain | |
| Policy ED-2.10 | | Strive to provide for a range of sites for a variety of retail development including sites that serve auto-oriented customers as well as those serving pedestrians. | Retain | |
| ~~Policy ED-2.11~~ | | ~~Explore the City's potential role in providing incubator space for microenterprise and small start-up retail businesses that are consistent with the Comprehensive Plan goals and policies for commercial and retail areas.~~ | **Consolidate** | Consolidated into Policy ED-1.6 |

| Goal or Policy | Existing Page Number | Existing Goal or Policy Text | First Draft Proposed Policy Revision<br>*The policies will undergo at least another round of revisions before their estimated final adoption in 2025* | Reasoning for Proposed Policy Change |
|---|---|---|---|---|
| Policy ED-2.12 | | Encourage development of circulation routes, signage, and information displays between Cap Sante Marina, Downtown and other commercial areas. | Retain | |
| Policy ED-2.13 | | Provide for adequate, convenient, and safe parking for cars and bicycles in all commercial areas. | ~~Retain~~Monitor vehicle parking and expand bicycle parking and electric vehicle charging infrastructure to ensure adequate, convenient, and safe parking for cars and bicycles in all commercial areas. | Updated language for consistency with Climate element. |
| Policy ED-2.14 | | Encourage commercial businesses that provide professional, financial and medical services to residents and visitors. | Retain | |
| **Goal ED-3** | | **Tourism. Maintain and enhance year round opportunities for sustainable tourism in keeping with the Community's vision.** | Retain | |
| Policy ED-3.1 | | Pursue opportunities that recognize Anacortes's unique historic heritage, culture, recreational amenities and natural setting. | Retain | |
| Policy ED-3.2 | | Actively work with business and tourism associations as well as other local organizations to establish a brand for Anacortes as a recognizable tourist destination. | Actively work with business, ~~and~~ tourism, and arts associations as well as other local organizations to establish a brand for Anacortes as a recognizable tourist destination. | |
| Policy ED-3.3 | | Consider creation of a City culture and tourism office to manage marketing and tourism promotion. | ~~Consider~~ Explore the creation and funding of a City culture and tourism office to manage marketing and tourism promotion. | Adjusted to include seeking funding. Changed "consider" to "explore" to be more proactive while retaining flexibility per Planning Commission 5/14 meeting. |
| Policy ED-3.4 | | Enhance entrances to the City with extensive landscaping and appropriate signage. | Enhance entrances to the City with ~~extensive~~ landscaping and appropriate gateway signage. | Adjusted language. "Extensive" seemed out of place. Could be further strengthened by identifying specific gateway locations if desired. |
| Policy ED-3.5 | | Encourage activities and facilities that attract visitors throughout the year. | ~~Encourage~~ Coordinate marketing and programming of activities and facilities that attract visitors throughout the year and increase the length of potential visitor experience~~.~~ | Combined with ED-3.12 |
| Policy ED-3.6 | | Encourage activities and facilities that serve residents as well as tourists. | Retain | |
| Policy ED-3.7 | | Encourage development of expanded lodging options to support overnight stays by tourists and other visitors. | Encourage development of expanded lodging options allowed by city regulations to support overnight stays by tourists and other visitors through land use and marketing. | Added more specificity on ways the city might do this. Added mention of regulations to ensure this policy does not conflict with recent short-term rental regulations. |
| Policy ED-3.8 | | Attract users of Washington State Ferries and other nearby destinations to spend time in Anacortes and patronize local businesses. | Retain | |
| Policy ED-3.9 | | Encourage development of a civic community gathering place and a destination events/concert/meeting/music venue or conference center with hotel in the downtown/waterfront area. | Retain | |
| Policy ED-3.10 | | Expand the amount and variety of attractions available to visitors, such as a fishing pier, sawmill museum, or other attractions that build on Anacortes's unique history and identity. | Expand the amount and variety of attractions available to visitors, such as a fishing pier, sawmill museum, and/or ~~other attractions~~a key focal tourist attraction that builds on Anacortes's unique history and identity. | Added mention of a key tourist attraction per Planning Commission meeting 5/14 |
| Policy ED-3.11 | | Promote Downtown Anacortes, including the Central Business District and Cap Sante Marina, the central Fidalgo Bay waterfront and south Commercial Avenue, as visitor destinations. | Retain | |
| ~~Policy ED-3.12~~ | | ~~Coordinate marketing and programming of visitor activities to increase the length of potential visitor experience.~~ | **Consolidate** | Consolidated into ED-3.5 |
| Policy ED-3.13 | | Coordinate marketing with other nearby attractions such as Deception Pass, Whidbey Island, and San Juan Islands. | Retain | |
| Policy ED-3.14 | | Improve vehicular and pedestrian connections between downtown and the waterfront and downtown and the State Ferry Terminal, including potential development of a shuttle service. | Improve vehicular and pedestrian connections between downtown and both the waterfront and ~~downtown and~~ the State Ferry Terminal, including potential development of a shuttle service. | Added clarity on connection to Economic Development and cross-reference to GHG emissions reduction to align with climate element. |

| Goal or Policy | Existing Page Number | Existing Goal or Policy Text | First Draft Proposed Policy Revision<br>*The policies will undergo at least another round of revisions before their estimated final adoption in 2025* | Reasoning for Proposed Policy Change |
|---|---|---|---|---|
| | | | to enhance accessibility to businesses and services, and help the City reduce GHG emissions | |
| New Policy ED- | | | Continue to encourage the state to re-establish international ferry service from Anacortes to British Columbia. | Added per Planning Commission suggestions 5/14 |
| **Goal ED-4** | | **Manufacturing and Industrial. Strengthen the marine trades economy and encourage other manufacturing and industrial opportunities.** | Retain | |
| Policy ED-4.1 | | Leverage marine traditions while protecting the natural environment and balancing public use of shoreline areas. | Retain | |
| Policy ED-4.2 | | Encourage location and retention of manufacturing, industrial, marine trade, high-tech and sustainable industry jobs that pay wages commensurate with the cost of living in Anacortes. | Retain | |
| Policy ED-4.3 | | Support special purpose facilities, such as a heavy boat lift, and the deep water port to enhance the competitive advantage for marine trades and marine industrial uses. | Retain | |
| Policy ED-4.4 | | Provide for adequate sites for supportive uses near marine dependent uses. | Retain | |
| Policy ED-4.5 | | Provide for adequate sites for large scale manufacturing operations, including sites near navigation channels and truck routes. | Retain | |
| Policy ED-4.6 | | Provide for maker spaces, incubator facilities and live/work options for smaller or startup enterprises. | Retain | |
| Policy ED-4.7 | | Anticipate and plan for potential future desired uses at the March Point refineries as product types, manufacturing processes, economic competitiveness, and transportation methods change. | Coordinate with Skagit county to ~~A~~anticipate and plan for potential future desired uses at the March Point refineries as product types, manufacturing processes, economic competitiveness, and transportation methods change. | Added mention of County, since the refinery is in the UGA. |
| ~~**Goal ED-5**~~ | | ~~**Other Growth Economic Sectors. Attract businesses in other sectors that offer growth opportunities and provide high wage jobs.**~~ | **Remove** | Policies consolidated under other goals as described below. |
| ~~Policy ED-5.1~~ | | ~~Identify and encourage development of industry clusters that can share technologies, facilities and labor resources.~~ | **Move** | Updated and moved under Goal ED-1 |
| ~~Policy ED-5.2~~ | | ~~Attract knowledge-based enterprises offering alternative technologies and services, including green industries such as environmental services and energy technologies.~~ | **Move** | Moved under Goal ED-1 |
| ~~Policy ED-5.3~~ | | ~~Encourage expansion of higher education opportunities locally through existing programs such as the Marine Technology Center and Shannon Point Marine Center, as well as attracting new educational facilities.~~ | **Remove** | Redundant with Policy ED-6.2 |
| ~~Policy ED-5.4~~ | | ~~Support expansion of local medical care facilities as sources of jobs and income, as well as support services to the community.~~ | **Move** | Moved under Goal ED-1 |
| **Goal ED-6** | | **Provide Education and Training. Collaborate with educational institutions to meet employer and workforce needs.** | Retain | Good goal to retain. |
| ~~Policy ED-6.1~~ | | ~~Encourage opportunities to train the workforce to develop skills for new technologies and family-wage jobs.~~ | **Consolidate** | Consolidated with Policy ED-6.2 |
| Policy ED-6.2 | | Collaborate with educational facilities (NW Center of Excellence for Marine Manufacturing and Technology, Shannon Point Marine Center, Rosario Beach Marine Laboratory, Skagit Valley College, etc.) and other public and private institutions to provide education and training for a broad range of careers and interests. | Collaborate with educational facilities (NW Center of Excellence for Marine Manufacturing and Technology, Shannon Point Marine Center, Rosario Beach Marine Laboratory, Skagit Valley College, etc.) and other public and private institutions to provide education and training for a broad range of careers, ~~and~~ interests, technologies, and to provide family-wage jobs. ~~.~~ | Consolidated with Policy ED-6.1. Added sub-bullet point to connect with "green jobs pipeline" in Climate Element Policy C ID: R.04 |

| Goal or Policy | Existing Page Number | Existing Goal or Policy Text | First Draft Proposed Policy Revision<br>*The policies will undergo at least another round of revisions before their estimated final adoption in 2025* | Reasoning for Proposed Policy Change |
|---|---|---|---|---|
| | | | • Promote awareness, education, and training for green job opportunities, particularly for lower-income, underemployed, and/or frontline communities. | |
| Policy ED-6.3 | | Encourage educational opportunities in entrepreneurship, innovation and mentoring. | Retain | |
| Policy ED-6.4 | | Encourage expansion of existing educational institutions. | Encourage expansion of existing educational institutions, including culinary and hospitality programs at Skagit Valley College. | Culinary and hospitality added per 5/14 Planning Commission conversation. |
| **Goal ED-7** | | **Enhance regulatory predictability. Streamline regulations and permitting.** | Retain | |
| Policy ED-7.1 | | Provide an efficient, clear and economical permitting process as a means of enhancing the City's goal for quality customer service. | Retain | |
| Policy ED-7.2 | | Craft land use and development regulations that offer a balance of predictability and flexibility. | ~~Craft~~ Maintain land use and development regulations that offer a balance of predictability and flexibility. | Updated to "maintain", as there was a major code update in 2019 that achieved this policy. |
| Policy ED-7.3 | | Monitor local economic conditions and update economic development policies at least every five years. | Retain | |
| Policy ED-7.4 | | Encourage the redevelopment of key and/or underused buildings and parcels through incentives and public/private partnerships. | Retain | |
| Policy ED-7.5 | | Provide incentives for land uses that enhance the city's vitality through a variety of regulatory and financial strategies. | Retain | |
| Policy ED-7.6 | | Support public/private partnerships to facilitate or fund infrastructure improvements that will result in increased economic opportunity. | Retain | |
| **Goal ED-8** | | **Ongoing commitment. Continue to collaborate with public and private partners to pursue local and regional economic development.** | Retain | |
| Policy ED-8.1 | | Actively work with other jurisdictions, educational institutions, environmental groups, agencies, economic development organizations, and local business associations to stimulate business retention, and implement interlocal and regional strategies. | Retain | |
| Policy ED-8.2 | | Improve marketing of the City's economic assets by:<br>• Inventorying and describing areas available for new and redevelopment activity.<br>• Engaging in cooperative activities with the Port of Anacortes, Chamber of Commerce, local businesses, state and county entities, tourist development agencies, Navy, private developers and realtors.<br>• Considering establishment of a Community and Business Development office or role to support and facilitate location of new business in Anacortes consistent with the Community's vision. | Improve marketing of the City's economic assets by:<br>• Inventorying and describing areas available for new and redevelopment activity.<br>• Engaging in cooperative activities with the Port of Anacortes, Chamber of Commerce, local businesses, state and county entities, tourist development agencies, Navy, private developers and realtors.<br>• Considering establishment of a Community and Business Development office or role to support and facilitate location of new business in Anacortes consistent with the Community's vision.<br>• Raising awareness of local business efforts to reduce emissions and increase resilience.<br>• Promoting how the use of local businesses can help Anacortes meet GHG emission reduction goals. | Added sub-bullets to align with Climate policy C ID: R-06 relating to patronizing local businesses as a means to support emissions reductions |
| Policy ED-8.3 | | Develop meaningful, measurable goals and strategies that promote community-desired economic development and monitor progress toward meeting those goals. | Retain | |

# Anacortes Comprehensive Plan Update

# Parks & Recreation Element Goals and Policies Tracker

**DRAFT May 5, 2025**

May 14, 2025 Planning Commission Suggested Changes Version

The Planning Commission reviewed the 1st draft proposed amendments at their May 14, 2025 meeting. The Planning Commission's suggested changes to the 1st draft, if any, are highlighted in yellow.

## Introduction

This goals and policies tracker reviews the Parks, Recreation & Open Space element of the 2016 Anacortes Comprehensive Plan in support of the 2025 periodic update. Further updates and additions will be added to the to meet Climate element requirements and better connect policies that are both parks/recreation and climate related.

## Parks & Recreation Element

### Goals and Policies

| Goal or Policy | Existing Goal or Policy Text | First Draft Proposed Policy Revision<br>*The policies will undergo at least another round of revisions before their estimated final adoption in 2025* | Reasoning for Proposed Policy Change |
|---|---|---|---|
| **Goal PR-1.** | **Park & Recreational Facilities.** Provide a range of high quality and easily accessible park and recreational areas, facilities, and opportunities that will serve a wide range of age groups, recreational interests, and ability levels. | **Park~~s~~ & Recreational Facilities.** Provide a range of high quality, safe, and easily accessible park and recreational areas, facilities, and opportunities that will serve a wide range of age groups, recreational interests, and ability levels. | Broadened to address safety. |
| Policy PR-1.1 | Provide park areas that are convenient to and accessible for the residents of Anacortes. | Provide park areas and facilities that are convenient to and accessible for ~~the~~ all residents of Anacortes.<br>a. Identify areas where there are gaps in access and target areas of highest need when prioritizing parks projects. Special emphasis should be placed on underserved locations and communities.<br>b. Prioritize development of safe walking and biking routes to public parks, green spaces, and recreational facilities to improve access. | Policy broadened to identify specific actions to help improve access to parks and recreation facilities |
| Policy PR-1.2 | Provide programs for as many people of diverse abilities, ages, and genders as our resources allow. | Retain as is. | |
| Policy PR-1.3. | Provide facilities and activities that are accessible per ADA standards and are sensitive to issues of universal accessibility in spirit. Increase awareness of accessible features via signage, publicity, and other means. | ~~Provide facilities~~ Design spaces and activities that are welcoming to people of all ages and abilities. ~~accessible per ADA standards and are sensitive to issues of universal accessibility in spirit.~~ Increase awareness of accessible features via signage, publicity, and other means. | Broadens this policy to reference principles of universal design. ADA design is already a requirement of federal law. |
| Policy PR-1.4. | Provide a balance of both active and passive recreation opportunities that encourage active lifestyles, facilitate lifelong participation and generate a respect for the natural environment. | Provide a balance of ~~both active and passive~~ recreation opportunities that encourage active lifestyles, facilitate lifelong participation, and generate a respect for the natural environment. | Removed the words active and passive from this goal because the type of recreation would be determined to by permitting requirements. |
| Policy PR-1.5. | Develop a comprehensive multi-purpose trail system to serve recreational and non-motorized transportation functions for a variety of users, including handicapped-accessible routes where feasible. | Develop a comprehensive multi-purpose trail system to serve recreational and non-motorized transportation functions for a variety of users, including ~~handicapped~~-accessible routes where feasible. | "Accessible" is the modern term. |
| NEW POLICY | | (NEW) Provide quality civic spaces and public places for community use and benefit with recreational opportunities that encourage social interaction, such as sidewalks with pedestrian amenities, public plazas, performance space, and pocket parks.<br>a. Engage community members and partners from the public, private, and nonprofit sectors in collectively reimagining and reinventing public spaces. | New policy to expand the idea of what a park or recreation facility is and promote development of community gathering spaces. |

| Goal or Policy | Existing Goal or Policy Text | First Draft Proposed Policy Revision<br>*The policies will undergo at least another round of revisions before their estimated final adoption in 2025* | Reasoning for Proposed Policy Change |
|---|---|---|---|
| | | b. Continue programs to incorporate art into public and private places and buildings.<br>c. Design spaces to incorporate elements that reflect Anacortes' shared identity, local heritage, and sense of place.<br>d. Encourage and support other public, non-profit, and private entities in providing public spaces serving the community. | |
| Policy PR-1.6. | Improve the arterial and neighborhood street system in the City to make provision for bicycle and pedestrian connections. | Remove | See PR-1.1, which incorporates this idea. |
| NEW POLICY | | (NEW) Continue to support arts and culture as an important component of community identity and the local economy. | Recognizes Parks and Recreation's role in supporting the arts. |
| Policy PR-1.7. | Support and encourage the Anacortes Community Forest Lands Management Plan's provision for the maintenance of a trail system for recreational users. | Remove | Fits better in PR-8 re: ACFL. Relocated. |
| Policy PR-1.8. | Develop a long range master plan for the provision of recreational programs and services. | ~~Develop a long-range master plan for the provision of recreational programs and services~~<br>Budget for and conduct a comprehensive review and update of the Parks & Recreation element to guide programming, services, and investments needed to best serve the community. The review and update should consider (but not be limited to):<br>a. National, regional, and local programming trends.<br>b. Equitable access to parks and programming for the entire community.<br>c. Evolving community needs and expectations.<br>d. Staff and budget resources needed to comply with cultural resources, critical areas, stormwater, shorelines and other regulations impacting development and maintenance activities.<br>e. Impacts resulting from or exacerbated by climate change on park and recreation facilities and operations.<br>f. The expanding role of the Parks and Recreation Department in providing services to the community.<br>g. Adequate and sustainable funding sources/options to support expected levels of service. | This policy provides some guidance for issues to consider with the next major update of the Parks and Recreation element. |
| Policy PR-1.9. | Include neighboring pocket parks when appropriate to allow for community connections. | Remove | Incorporated into new policy re: quality civic spaces, above. |
| Policy PR-1.10. | In cooperation with community partners (e.g. Anacortes School District, the Boys & Girls Club, etc.) explore options for potential development of a community center as a place where people can gather and recreate. | In cooperation with community partners ~~(e.g. Anacortes School District, the Boys & Girls Club, etc.)~~ explore feasibility, including funding options, for potential development of a community center as a place where people can gather and recreate. | This is a more general approach that does not exclude future partners. |

| Goal or Policy | Existing Goal or Policy Text | First Draft Proposed Policy Revision<br>*The policies will undergo at least another round of revisions before their estimated final adoption in 2025* | Reasoning for Proposed Policy Change |
|---|---|---|---|
| **Goal PR-2.** | **Shoreline Access.** Increase the opportunities for public access to and enjoyment of the shorelines of Anacortes, including both physical and visual access. | Retain as is. | |
| Policy PR-2.1 | Place a high priority on completing the multi-use trail along Guemes Channel from the Depot Arts Center to Washington Park with links to other natural areas including the ACFL and Ship Harbor Interpretive Preserve. | Retain as is. | |
| Policy PR-2.2. | Pursue public-private and other agency partnerships in developing conveniently-spaced public access points to the Guemes Channel trail that include parking and other facilities that are designed to be compatible with their surroundings. | Retain as is. | |
| Policy PR-2.3. | Work with the Port of Anacortes to develop and interconnect Cap Sante Marina and surrounding areas including:<br>A. Continuing to support transient moorage facilities.<br>B. Developing a public fishing pier.<br>C. Enhancing landscaping, roadways, signage and pedestrian walkways.<br>D. Developing a small boating facility and associated parking. | Retain as is. | |
| Policy PR-2.4. | Develop a public trailer boat launch adjacent to the downtown area. | ~~Develop~~ Support a public trailer boat launch adjacent to the downtown area for small boat and hand powered craft. | Larger boats have a launch opportunity at Cap Sante Marina, small craft are looking for access on this side of Anacortes. |
| Policy PR-2.5. | City owned rights-of-way or street ends that afford access to, or views of, marine shorelines should be evaluated for suitability as street end parks and/or wildlife corridors and developed as such if appropriate. | Evaluate ~~City owned~~ public rights-of-way ~~or~~ and street ends that afford access to, or views of, marine shorelines ~~should be evaluated~~ for suitability as street end parks and/or wildlife corridors. ~~and d~~Develop~~ed~~ a plan for improving them as such when feasible, and consistent with the Shoreline Master Program. ~~if appropriate~~. | There some street ends that are parks, and others that serve as parks but are not officially parks. This can be a problem for maintenance and enforcement of after-hours vehicle parking. Staff could do an assessment of these assets for inclusion in the Park system. |
| **Goal PR-3.** | **Efficient Parks Program Management.** Provide parks, open space, recreation facilities, and a comprehensive recreation services program to the citizens of Anacortes in a well-run, economical and cost-effective manner. | Retain as is. | |
| Policy PR-3.1. | Develop safe, high quality facilities that serve multiple purposes and functions whenever appropriate. | Retain as is. | |
| Policy PR-3.2. | Avoid duplication of recreational programming with non-departmental organizations unless the demand for additional programs exceeds the supply. | Avoid duplication of recreational programming with ~~non-departmental organizations~~ non-profit or for-profit organizations unless the demand for additional programs exceeds the supply. | In a small town with limited resources we try not to duplicate what other organizations or local businesses are offering. |
| Policy PR-3.3. | Manage recreation on an economically sound basis, evaluating the need for fees on a case-by-case basis. | Retain as is. | |

| Goal or Policy | Existing Goal or Policy Text | First Draft Proposed Policy Revision<br>*The policies will undergo at least another round of revisions before their estimated final adoption in 2025* | Reasoning for Proposed Policy Change |
|---|---|---|---|
| Policy PR-3.4. | Provide leadership for all park and recreation activities in Anacortes by assisting other agencies, groups, and individuals in their efforts to improve their quality of life. Act as a catalyst to help special interest groups organize and run their own programs, especially when for the benefit of local residents. | Retain as is. | |
| Policy PR-3.5. | Foster and promote stewardship of the Anacortes Park and open space system. | Retain as is. | |
| Policy PR-3.6. | Place planning emphasis on the development of a linked system of parks and open spaces. | **Remove – relocated.** | This fits better under the Open Space connectivity goal (PR-9.) and has been consolidated with PR-9.2. |
| Policy PR-3.7. | Broaden the public understanding of parks to include sidewalks, boulevards, street ends and open space on other public properties. | Retain as is. | |
| Policy PR-3.8. | When developing acquisition plans for new parks consider and provide for maintenance and operation costs. | Retain as is. | |
| Policy PR-3.9. | Prepare master plans for development or improvement of existing parks based upon real needs. | Prepare master plans for development or improvement of existing parks based upon ~~real needs~~ community support and departmental goals. | This description is more accurate as to how plans are actually developed. |
| Policy PR-3.10. | Recruit, involve, and utilize volunteers in the planning and delivery of park and recreation programs. | Retain as is. | |
| Policy PR-3.11. | Develop and implement parks and maintenance procedures that enhance the quality and durability of our park facilities. | Develop and implement ~~parks~~ plans and ~~maintenance~~ high quality maintenance procedures that enhance the safety, quality, ~~and~~ durability and sustainability of our parks, community forestlands, and all related facilities. | |
| Policy PR-3.12. | Maintain adequate funding sources for parks and recreation planning, development, management and maintenance and maintain a plan for capital improvements to guide capital expenditures, utilizing City funding, grants and fees for programs. | Maintain adequate funding sources for parks and recreation planning, development, management and maintenance. Maintain a plan for capital improvements to guide capital expenditures, utilizing City funding, grants, fees for programs and a possible levy to secure necessary funding. | The addition of a possible levy in the future is important to consider especially if a community center is established. This, in addition to our current programming, is likely to require extra funding. |
| Policy PR-3.13. | Continue to promote close working relationships with the Anacortes School District, Skagit County, the Port of Anacortes, citizen groups, volunteers and others who provide recreation programs and services including jointly funded projects where applicable. | Continue to promote close working relationships with the Anacortes School District, Skagit County, the Port of Anacortes, Samish Indian Nation, citizen groups, volunteers and others who provide recreation programs and services including jointly funded projects where applicable. | |
| NEW | | (NEW) Consider ~~proving~~ providing a full-time, fully commissioned Park ranger, employed in the Police Department, dedicated to working in the City's Parks and Forestlands. | This is a new policy. It reflects the changes made by APD to their plan regarding the growing need for law enforcement in the parks system. |

| Goal or Policy | Existing Goal or Policy Text | First Draft Proposed Policy Revision<br>*The policies will undergo at least another round of revisions before their estimated final adoption in 2025* | Reasoning for Proposed Policy Change |
|---|---|---|---|
| **Goal PR-4.** | **Community Engagement.** Engage the public in decisions about planning, acquisition, development and management of park and recreation facilities and programs. | **Community Engagement.** Engage the public in decisions about planning, acquisition, development and management of park, forest lands, ~~and~~ recreation facilities and programs. | Added community forest lands. |
| Policy PR-4.1. | Maintain community engagement and a public feedback system to increase the community's awareness of and involvement in such issues as changes in recreation interests, park maintenance, city operations and services, etc. through the Parks and Recreation Advisory Committee and Forest Advisory Board. | Maintain community engagement and a public feedback system to increase the community's awareness of and involvement in such issues as changes in recreation interests, park maintenance, city operations and services, etc. through the Parks and Recreation Advisory ~~Committee~~ Commission, Arts Commission, and Forest Advisory Board. | Corrected mis-identification and added Arts Commission. |
| Policy PR-4.2. | Utilize the Parks and Recreation Advisory Committee and Forest Advisory Board's monthly meetings to hear public comments and take feedback on community interests and concerns. | Utilize the Parks and Recreation Advisory ~~Committee~~ Commission, Arts Commission and Forest Advisory Board's monthly meetings to hear public comments and take feedback on community interests and concerns. | Corrected mis-identification and added Arts Commission. |
| Policy PR-4.3. | The Parks and Recreation Advisory Commission will advise the City Council regarding the management of the Ship Harbor Interpretive Preserve. The Commission shall receive input from a subcommittee made up of interested community members who should have representation from environmental educators, the Shannon Point Marine Research Center, Evergreen Islands, Friends of the Forest, Anacortes School District, Samish Nation, Washington State Ferry System and others as appropriate. | The Parks and Recreation Advisory Commission will advise the City Council regarding the management of the Ship Harbor Interpretive Preserve. The Commission shall receive input from the public, community partners and sovereign Indian Nations while following permit guidelines as necessary under local, state and federal requirements. ~~a subcommittee made up of interested community members who should have representation from environmental educators, the Shannon Point Marine Research Center, Evergreen Islands, Friends of the Forest, Anacortes School District, Samish Nation, Washington State Ferry System and others as appropriate.~~ | This policy was updated to reflect current practices. |
| Policy PR-4.4. | The ACFL Advisory Board will advise City Council on management of all the lands that formerly comprised Heart Lake State Park, as well as Mt. Erie including the summit; and the area around Little Cranberry Lake dedicated in 1964 by City Council as Little Cranberry Lake Park. | Retain as is. | |
| Policy PR-4.5. | Use a variety of modalities to communicate with the public including direct mailings, the City of Anacortes website, the government access television channel, e-mail lists, local popular press, local radio stations, etc. | Use a variety of modalities to communicate with the public including direct mailings, the City of Anacortes website, the government access television channel, e-mail lists, local popular press, social media, local radio stations, etc | Social media is a primary way we communicate with the public. |
| **Goal PR-5.** | **Parks Facilities Maintenance.** Develop and implement parks and maintenance procedures that enhance the quality and durability of our park facilities. | **Remove** | Incorporated this goal and policies into PR-3 Efficient Parks Management. |
| Policy PR-5.1 | Provide a high level of maintenance for all City facilities appropriate to the needs of the park. | **Remove** | |

| Goal or Policy | Existing Goal or Policy Text | First Draft Proposed Policy Revision<br>*The policies will undergo at least another round of revisions before their estimated final adoption in 2025* | Reasoning for Proposed Policy Change |
|---|---|---|---|
| Policy PR-5.2. | Develop specific maintenance plans for some areas of the park system that address staffing priorities, equipment needs, etc. | **Remove** | |
| **Goal PR-6.** | **Parks Funding.** Ensure adequate funding sources for parks and recreation planning, management, maintenance and maintain a plan for capital improvements to guide capital expenditures. | ~~**Parks**~~ **Funding.** Ensure adequate funding sources for parks and recreation planning, management, maintenance and maintain a plan for capital improvements to guide capital expenditures. | This section discusses funding for more than just parks. |
| Policy PR-6.1. | Prepare, maintain, and implement a comprehensive park, recreational and open space plan that fulfills the requirements for state and local granting agencies. | ~~Prepare, maintain, and implement a comprehensive~~ Review and periodically update the ~~p~~Parks, ~~r~~Recreation~~al~~, and ~~o~~Open ~~s~~Space element to ensure ~~plan~~ that it fulfills the requirements ~~for~~ of the Growth management Act and state and local granting agencies. | The Parks, Recreation & Opens Space element is intended to be this plan. |
| Policy PR-6.2. | Pursue grant funding as appropriate to acquire and develop parks facilities and recreation programs. | Retain as is. | |
| Policy PR-6.3. | Establish an operating budget that addresses the public demand, needs and interests as expressed in public opinion surveys. | Establish an operating budget that addresses the public demand, needs and interests. ~~as expressed in public opinion surveys~~. Acknowledge growing population and need for adequate staffing to cover increased demands for parks services, recreation programing and maintenance at other city facilities. | Our budget is not based on public opinion surveys. This change is more accurate regarding the current state of departmental needs and planning to address them. |
| Policy PR-6.4. | Develop fees and charges policy for residents of the City of Anacortes that is based on the ability to pay with costs shared between the City and the user. | Retain as is. | |
| Policy PR-6.5. | Work with Skagit County to develop a specific approach to meeting the needs of those people living outside the City limits but likely to utilize City park and recreation services. | Retain as is. | |
| Policy PR-6.6 | Require new residential development to provide impact fee payments to the City. | **Remove.** | The City currently charges park impact fees for residential and commercial uses. |
| Policy PR-6.7. | Adjust park impact fees to keep park facilities current with growth. | ~~Adjust park impact fees to keep park facilities current with growth.~~ Monitor growth and, at least every periodic update cycle, update the forecast of future park facility needs based on adopted levels of service. Update park impact fees to keep current with ~~growth~~ the rising cost of construction. | This a more specific goal for keeping up with population growth. |
| Policy PR-6.8. | Foster partnerships and cooperative efforts with other agencies, jurisdictions, citizen groups and volunteers in planning for parks, recreation, and open space opportunities. | Foster partnerships and cooperative efforts with other agencies, jurisdictions, citizen groups and volunteers in planning and identifying funding for parks, recreation, and open space opportunities. | The addition of funding makes for creating more realistic goal setting. |
| Policy PR-6.9. | Continue to promote close working relationships with the Anacortes School District, Skagit County, the Port of Anacortes, and others who provide recreation programs and services including jointly funded projects where applicable. | **Remove.** | Repeat of Policy 3.13. |

| Goal or Policy | Existing Goal or Policy Text | First Draft Proposed Policy Revision<br>*The policies will undergo at least another round of revisions before their estimated final adoption in 2025* | Reasoning for Proposed Policy Change |
|---|---|---|---|
| **Goal PR-7.** | **Environmental Stewardship.** Design, construct and manage parks facilities and programs with sensitivity to the protection and restoration of environmental resources and natural habitats. | Retain as is. | |
| Policy PR-7.1. | Design and operate all park projects to comply with the City's Critical Areas, Tree Preservation, Stormwater and Shoreline Regulations. | Retain as is. | |
| Policy PR-7.2. | Include greenbelts in new park development or park redevelopment where appropriate; these greenbelts should include pedestrian connections, wildlife corridors and park/forestland buffers wherever practicable and reasonable. | Retain as is. | |
| Policy PR-7.3. | Provide recreational opportunities while preserving and enhancing the resource value of each site (natural, cultural, historic, and recreational, etc.). | Retain as is. | |
| Policy PR-7.4. | Promote stewardship of native habitat for wildlife and native vegetation where the choice contributes to habitat value in parks or areas of parks with natural lands, especially for sensitive habitats and habitats that are in decline. | Retain as is. | |
| Policy PR-7.5. | Maintain or improve the functional integrity of watercourses, wetlands, bodies of water and their shores by keeping them in their existing natural condition where appropriate or restoring them as appropriate. | Retain as is. | |
| Policy PR-7.6. | Continue to reduce the use of chemical fertilizers, pesticides and herbicides and to test the use of less toxic alternatives, particularly in areas immediately adjacent to waterways and wetlands. | Retain as is. | |
| Policy PR-7.7. | Continue program to remove non-native invasive plant species from parks, the ACFL, and city green spaces. | Retain as is. | |
| Policy PR-7.8. | Increase recycling collection, purchase recycled products and promote energy conservation in parks facilities. | Retain as is. | |
| Policy PR-7.9. | Purchase alternative fuel vehicles and requirement when appropriate for parks maintenance needs. | Purchase alternative fuel vehicles ~~and requirement~~ when appropriate for parks maintenance needs. | Edited because the previous version did not make sense. |
| Policy PR-7.10. | Take measures to minimize storm water runoff from park grounds using Low Impact Development (LID) when appropriate. | Retain as is. | |
| Policy PR-7.11. | For stormwater discharge from Anacortes Parks, provide treatment that effectively reduces or eliminates trash, oil, toxicants and fecal bacteria prior to being discharged to marine water of the Puget Sound when appropriate. | Retain as is. | |
| Policy PR-7.12. | Review and implement environmentally sound practices. This could include looking at water consumption, electrical power consumption, paper use, fertilizer use, herbicide use, gas consumption, etc. | Retain as is. | |

| Goal or Policy | Existing Goal or Policy Text | First Draft Proposed Policy Revision<br>*The policies will undergo at least another round of revisions before their estimated final adoption in 2025* | Reasoning for Proposed Policy Change |
|---|---|---|---|
| **Goal PR-8.** | **Forestlands Management.** Manage the Anacortes Community Forest Lands (ACFL) with the principal goals of maintaining and enhancing habitat, aesthetic, and recreational values. | Retain as is. | |
| NEW POLICY | | **(NEW).** Continue to manage all uses and activities within the Anacortes Community Forestlands (ACFL) in accordance with the adopted Anacortes Community Forest Lands Plan, recorded conservation easements, and applicable municipal code provisions. | Directs readers to the standalone ACFL Master Plan, which contains its own use and management policies, and other mechanisms that address activities within the ACFL. |
| Policy PR-8.1. | The Anacortes Community Forest Lands' (ACFL) are critical areas having the designation as a Wildlife Habitat Conservation Area. | Maintain t~~T~~he Anacortes Community Forest Lands' (ACFL) ~~are~~ critical area~~s~~ ~~having the~~ designation as a Fish and Wildlife Habitat Conservation Area - Habitat of Local Importance. | Reworded to use correct terminology and use active voice. |
| NEW POLICY | | **(NEW)** Develop a set of standard operating procedures for common maintenance and repair activities within the ACFL, including best management practices to ensure impacts to ecological functions are avoided, minimized, or mitigated when necessary. | Maintenance and repair of trails and other facilities within the ACFL often requires review under the City's critical areas regulations. A set of SOPs may help expedite review while ensuring critical areas functions are maintained. |
| Policy PR-8.2. | Acquisition and habitat restoration funding for the ACFL, shoreline areas, and wildlife corridors will remain a high priority. | Prioritize a~~A~~cquisition and habitat restoration funding for the ACFL, shoreline areas, and wildlife corridors ~~will remain a high priority~~. | |
| Policy PR-8.3. | The Anacortes Community Forest Lands should be managed to maintain their pristine and/or fragile environment and to preserve watersheds, wildlife habitats, wetlands, and aesthetic values, while providing for appropriate low-impact recreational uses with priority for residents. | **Remove.** | This is repeated in the ACFL Plan, which is referenced in a new policy under Goal PR-8. |
| Policy PR-8.4. | Continue to work towards the placement of conservation easements on all lands either currently in or added to the ACFL. | Retain as is. | |
| Policy PR-8.5. | Continue to support the basic operation of the ACFL with General Fund dollars and augment that with interest from the Forest Endowment Fund. | Retain as is. | |
| Policy PR-8.6. | Continue to find ways to fund the Forest Endowment fund either with the Conservation Easement Program (CEP) that can be as successful as the CEP. | Continue to find ways to fund the Forest Endowment fund as opportunities present themselves. ~~either with the Conservation Easement Program (CEP) that can be as successful as the CEP.~~ | Previous sentence was unclear. |
| Policy PR 8.7 | | Promote the work of citizen science groups for collecting data in the Anacortes Community Forest Lands. ~~Groups seeking to do this work as is currently done by the Friends of the ACFL and Transition Fidalgo, need to gain approval of the Forest Advisory Board and the Parks and Recreation Director or their designee.~~ | This reflects the desire for scientific data in the ACFL and our current practices. |
| **Goal PR-9.** | **Open space connectivity.** Establish and acquire a network of open space and public access corridors. | Retain as is. | |
| Policy PR-9.1. | Develop an integrated open space network plan that identifies connection opportunities between historical, cultural, aesthetic, | **Remove.** | Consolidated with PR-9.2. |

| Goal or Policy | Existing Goal or Policy Text | First Draft Proposed Policy Revision<br>*The policies will undergo at least another round of revisions before their estimated final adoption in 2025* | Reasoning for Proposed Policy Change |
|---|---|---|---|
| | archaeological, biological, natural, recreational, and educational sites. | | |
| Policy PR-9.2. | Maintain and periodically update the "Open Space Connectivity Map" to identify greenbelt and open space areas within the urban growth area and between urban growth areas, generally consistent with the Skagit Countywide UGA Open Space Concept Plan (2009). This includes connections that link the Tommy Thompson Trail, Cap Sante, Washington Park, the downtown, marinas, city trails, schools and other assets; and links between the Community Forestlands and Deception Pass State Park. | ~~Maintain and periodically update the "Open Space Connectivity Map" to identify~~ Identify and plan for a linked system of open space corridors within the urban growth area, including lands useful for recreation, wildlife habitat, trails, and connection of critical areas. ~~greenbelt and open space areas within the urban growth area and between urban growth areas,~~<br>A. Maintain and periodically update the "Open Space Connectivity Map". The map should be generally consistent with the Skagit Countywide UGA Open Space Concept Plan (2009), which ~~This~~ includes connections that link the Tommy Thompson Trail, Cap Sante, Washington Park, the downtown, marinas, city trails, schools, US Bike Route 10 and other assets; and links between the Community Forestlands and Deception Pass State Park.<br>B. Identify potential open space connection opportunities across adjacent parcels when development is proposed.<br>C. Identify potential open space connection opportunities between historical, cultural, aesthetic, archaeological, biological, natural, recreational, and educational sites. | Updated language for consistency with WAC 365-196-335; to identify connection opportunities between parcels when development is proposed and to consolidate PR-9.1 with PR-9.2. |
| Policy P-9.3. | Funding the protection of open space required for habitat, wildlife movement, public access, non-motorized recreational corridors, and similar purposes shall continue to be a City priority . | Prioritize f~~F~~unding the protection of open space required for habitat, wildlife movement, public access, non-motorized recreational corridors, and similar purposes ~~shall continue to be a City priority~~ . | Updated for clarity and directness. |
| Policy PR-9.4. | Unopened or under-developed rights-of-way shall be evaluated for use as non-motorized public and community access and wildlife corridors prior to granting any vacation or encroachment easement. | Retain u~~U~~nopened or under-developed public rights-of-way ~~shall be evaluated~~ for use as non-motorized public and community access and wildlife corridors ~~prior to granting any vacation or encroachment easement~~. | Update for consistency in use of terms and directness. |
| Policy PR-9.5. | Consider methods to preserve areas with open space value adjacent to Anacortes Community Forest Lands, including native growth protection easements and building setbacks. | Retain as is. | |
| NEW GOAL | **(NEW) Senior Activity Center.** The Senior Activity Center's mission is to create a place where seniors thrive. Our vision is to enrich the lives of our participants by creating a vibrant, welcoming and inclusive environment. | | New goal and supporting policies to reflect the addition of the Senior Activity Center into the Parks and Recreation Dept. |
| NEW POLICY | (NEW) Work with local, regional and national partners to share resources and ideas, understand senior needs, and proactively respond to the emerging needs of older adults in Anacortes. | | |
| NEW POLICY | (NEW) Develop, implement and execute programs that align with community needs and available staff and volunteer resources. Most programs will target participants in the 55+ demographic, however, as a City Parks and Recreation facility, we have an increasing desire to serve residents of all ages by facilitating multi-generational activities. | | |
| NEW POLICY | (NEW) Actively recruit, train and support Center volunteers who are key to the success of our operational objectives. | | |

| Goal or Policy | Existing Goal or Policy Text | First Draft Proposed Policy Revision<br>*The policies will undergo at least another round of revisions before their estimated final adoption in 2025* | Reasoning for Proposed Policy Change |
|---|---|---|---|
| NEW POLICY | (NEW) Maintain effective ~~and~~ stewardship of City and private donor resources and contributions for capital and programming needs of the Center. | | |

Public Comments Received
from 5/14/25 at 3pm thru
5/28/25 at 10am

Page intentionally left blank

May 18, 2025

Planning Commissioners, PCED
PO Box 547
Anacortes, WA 98221

To Commissioners and PCED staff:

As was noted during the 05/14/2025 Planning Commission meeting, Greenhouse Gases from the refinery are appropriately included in the County inventory, not that of Anacortes. With that confirmation, it seemed the Commissioners excused themselves from further modifications to the Comprehensive Plan relative to the refineries. Hopefully this is not true. Public Comments, particularly the specific recommendations from Re-sources and Evergreen Islands addressed issues beyond Greenhouse Gases, with a focus on future land uses and environmental protections. (It is understood that of the multiple areas for review, it was the Climate Element not Capital Facilities, Land Use, etc. that were subject for review Wednesday night.)

The conversation that evening represented some hard work by Commissioners. I applaud each of you for that, just want to be sure that Green House Gases are not viewed as the sole issue with respect to the refineries. Despite being outside the city limits, the City of Anacortes DOES still have responsibility for the future of March's Point. Unfortunately, overlapping jurisdiction with the County makes it confusing: where does responsibility of each entity begin and end. Nevertheless, here is an opportunity for forward thinking/future planning.

Thank you for the work you and the Planning, Community and Economic Development Department are doing. It is definitely a major and important undertaking and commitment to the process is appreciated.

Sincerely,

Kathleen Lorence-Flanagan
2005 10th St.
Anacortes, WA 98221

## Libby Grage

**From:** Andrea Doll <andrea.doll@gmail.com>
**Sent:** Saturday, May 24, 2025 8:29 AM
**To:** Comp Plan
**Subject:** Support for key economic development recommendations in the draft Comp Plan

***** This email is from outside the City of Anacortes network. Please use caution when clicking on links, opening attachments, or replying. *****

Dear Chair Martin and Members of the Planning Commission,

I want Anacortes to have a vibrant future with an economy that is transitioning off fossil fuels while also supporting businesses, workers, and clean air.

I support these recommendations in the draft Comp Plan – we need them in the plan and then to move them forward:

Balanced Economy Goal, Policy ED-1.1, which includes the improvement of the well-being of residents.

Tourism Goal, Policy ED-3.1, which includes recognizing Anacortes's unique historic heritage, culture, recreational amenities and natural setting.

Manufacturing and Industrial Goal, Policy ED-4.2 which encourages growing and keeping jobs that pay wages commensurate with the cost of living in Anacortes.

Manufacturing and Industrial Goal, Policy ED-4.7, which includes anticipating and planning for a clean energy future at March Point.

I urge you to keep these in the Comprehensive Plan and then help make them reality.

Thank you!

Sent from my iPad

## Libby Grage

**From:** Corinne Salcedo <scorinne@msn.com>
**Sent:** Saturday, May 24, 2025 11:41 AM
**To:** Comp Plan
**Subject:** Support for key economic development recommendations in the draft Comp Plan

***** This email is from outside the City of Anacortes network. Please use caution when clicking on links, opening attachments, or replying. *****

Dear Chair Martin and Members of the Planning Commission,

I want Anacortes to have a vibrant future with an economy that is transitioning off fossil fuels while also supporting businesses, workers, and clean air.

I support these recommendations in the draft Comp Plan – we need them in the plan and then to move them forward:

Balanced Economy Goal, Policy ED-1.1, which includes the improvement of the well-being of residents.

Tourism Goal, Policy ED-3.1, which includes recognizing Anacortes's unique historic heritage, culture, recreational amenities and natural setting.

Manufacturing and Industrial Goal, Policy ED-4.2 which encourages growing and keeping jobs that pay wages commensurate with the cost of living in Anacortes.

Manufacturing and Industrial Goal, Policy ED-4.7, which includes anticipating and planning for a clean energy future at March Point.

I urge you to keep these in the Comprehensive Plan and then help make them reality.

Thank you!

Sent from my iPhone